ABB MEASUREMENT & ANALYTICS | DATA SHEET

266GST and 266AST

Gauge and absolute pressure transmitters

Measurement made easy
Engineered solutions for all applications

Base accuracy
- 0.04 % of calibrated span (optional 0.025 %)

Proven sensor technology together with state-of-the-art digital technology
- Large turn down ratio of up to 100:1

Comprehensive selection of sensors
- Optimized performance and stability

10–year stability
- 0.15 % of URL

Flexible configuration options
- Local configuration via keys on LCD indicator

New TTG (Through-The-Glass) key technology
- Enables quick and easy local configuration without the need to open the cover - even in environments with explosion protection

IEC 61508 certification
- For SIL2 (1oo1) and SIL3 (1oo2) applications

Full compliance with Pressure Equipment Directive (PED) category III

Product in compliance with Directive 2011/65/UE (RoHS II)

In-built advanced diagnostics

Specification – functional

Range and span limits

Sensor Code	Upper Range Limit (URL)	Lower Range Limit (LRL) 266GST *	Minimum measuring span 266GST	Minimum measuring span 266AST
C	6 kPa 60 mbar 24 inH2O	–6 kPa –60 mbar –24 inH2O	0.2 kPa 2 mbar 0.8 inH2O	0.3 kPa 3 mbar 2.25 mmHg
F	40 kPa 400 mbar 160 inH2O	–40 kPa –400 mbar –160 inH2O	0.4 kPa 4 mbar 1.6 inH2O	2 kPa 20 mbar 15 mmHg
L	250 kPa 2500 mbar 1000 inH2O	–100 kPa – 1 bar –14.5 psi	2.5 kPa 25 mbar 10 inH2O	12.5 kPa 125 mbar 93.8 mmHg
D	1000 kPa 10 bar 145 psi	–100 kPa – 1 bar –14.5 psi	10 kPa 100 mbar 1.45 psi	50 kPa 500 mbar 7.25 psi
U	3000 kPa 30 bar 435 psi	–100 kPa – 1 bar –14.5 psi	30 kPa 0.3 bar 4.35 psi	150 kPa 1.5 bar 21.7 psi
R	10000 kPa 100 bar 1450 psi	–100 kPa – 1 bar –14.5 psi	100 kPa 1 bar 14.5 psi	500 kPa 5 bar 72.6 psi
V	60000 kPa 600 bar 8700 psi	–100 kPa – 1 bar –14.5 psi	600 kPa 6 bar 87 psi	-

* Measuring range lower limit (LRL) for 266AST is 0 abs for all measuring ranges

Span limits

Maximum span = URL

For optimum measuring accuracy, it is recommended that you select the sensor code which will provide the lowest TD value.

Zero position suppression and elevation

The zero position and span can be set to any value within the measuring range limits listed in the table if:

- adjusted span ≥ smallest span

Damping

Configurable time constant between 0 and 60 s.

This is in addition to the sensor response time.

Warm-up time

Ready for operation as per specifications in less than 10 s with minimum damping.

Insulation resistance

>100 MΩ at 500 V DC (between terminals and ground).

Specification – operative limits

Pressure limits

Overpressure limits

Without damage to the transmitter

Sensors	Overpressure limits
Sensor C, F	0 absolute and 1 MPa, 10 bar, 145 psi
Sensor L	0 absolute and 3 MPa, 30 bar, 435 psi
Sensor D	0 absolute and 6 MPa, 60 bar, 870 psi
Sensor U	0 absolute and 6 MPa, 60 bar, 870 psi
Sensor R	0 absolute and 30 MPa, 300 bar, 4300 psi
Sensor V	0 absolute and 90 MPa, 900 bar, 13050 psi

Test pressure

The transmitter can be be subjected to a line pressure up to the following values without leakage:

Sensors	Overpressure limits
Sensor C, F	0 absolute and 1 MPa, 10 bar, 145 psi
Sensor L	0 absolute and 3 MPa, 30 bar, 435 psi
Sensor D	0 absolute and 6 MPa, 60 bar, 870 psi
Sensor U	0 absolute and 6 MPa, 60 bar, 870 psi
Sensor R	0 absolute and 30 MPa, 300 bar, 4300 psi
Sensor V	0 absolute and 90 MPa, 900 bar, 13050 psi

Meets hydrostatic test requirements of ANSI/ISA–S 82.03.

Temperature limits °C (°F)

Environment

This is the operating temperature

Models 266GST, 266AST	Ambient temperature limits
Silicone oil	–40 to 85 °C (–40 to 185 °F)
Fluorocarbon (Galden)	–40 to 85 °C (–40 to 185 °F)
White oil	–6 to 85 °C (21 to 185 °F)
Integral LCD display	–40 to 85 °C (–40 to 185 °F)

Below –20 °C (–4 °F) and above 70 °C (158 °F), it may no longer be possible to read the LCD display clearly.

IMPORTANT

For applications in explosive environments, the temperature range specified on the certificate / approval applies dependent upon the degree of protection sought.

Process

Models 266GST, 266AST	Process temperature limits
Silicone oil	–50 to 121 °C (–58 to 250 °F)
Fluorocarbon (Galden)	–40 to 121 °C (–40 and 250 °F)
White oil	–6 to 121 °C (21 to 250 °F)

≤ 85 °C (185 °F) for operating pressures below the atmospheric pressure

Storage

Models 266GST, 266AST	Storage temperature range
Storage temperature	–50 to 85 °C (–58 to 185 °F)
Integral LCD display	–40 to 85 °C (–40 to 185 °F)
White oil	–6 to 85 °C (21 to 185 °F)

...Specification – operative limits

Limits for environmental effects

Electromagnetic compatibility (EMC)

Meets requirements of EN 61326 and Namur NE-21 (option)
Overvoltage strength (with surge protection): 4 kV (in acc. with IEC 1000-4-5 EN 61000-4-5)

Pressure Equipment Directive (PED)

Meets requirements of Directive 2014/68/EU category III module H.

Humidity

Relative humidity: Up to 100 %.
Condensation, icing: Permissible

Vibration resistance

Acceleration up to 2 g at frequencies of up to 1000 Hz (according to IEC 60068-2-6).
Acceleration limited to 1 g for housing out of stainless steel.

Shock resistance

Acceleration: 50 g
Duration: 11 ms
(according to IEC 60068–2–27).

IP rating

In accordance with EN 60529, JIS C0920
The transmitter is dust and sand proof and protected against immersion effects.

- IP 67, IP 68 **on request**, NEMA 4X
- IP 65 (devices with Harting Han plug connector)
- IP 66 (devices with barrel housing made from aluminum or stainless steel housing)

Hazardous atmospheres

With or without integral display

INTRINSIC SAFETY Ex ia:

- ATEX Europe (code E1) approval
  II 1 G Ex ia IIC T6...T4 Ga, II 1/2 G Ex ia IIC T6...T4 Ga/Gb, II 1 D Ex ia IIIC T85 °C Da, II 1/2 D Ex ia IIIC T85 °C Da; IP66, IP67.
- IECEx (code E8) approval
  Ex ia IIC T6...T4 Ga/Gb, Ex ia IIIC T85 °C Da; IP66, IP67.
- NEPSI China (code EY)
  Ex ia IIC T4/T5/T6 Ga, Ex ia IIC T4/T5/T6 Ga/Gb, Ex iaD 20 T85/T100/T135, Ex iaD 20/21 T85/T100/T135.

EXPLOSION PROOF:

- ATEX Europe (code E2) approval
  II 1/2 G Ex db IIC T6 Ga/Gb Ta=–50 °C to +75 °C, II 1/2 D Ex tb IIIC T85 °C Db Ta = –50 °C to +75 °C; IP66, IP67.
- IECEx (code E9) approval
  Ex db IIC T6 Ga/Gb Ta=–50 °C to +75 °C, Ex tb IIIC T85 °C Db Ta = –50 °C to +75 °C; IP66, IP67.
- NEPSI China (code EZ)
  Ex d IIC T6 Gb, Ex tD A21 IP67 T85 °C.

INTRINSIC SAFETY Ex ic:

- ATEX Europe (code E3) type examination
  II 3 G Ex ic IIC T6...T4 Gc, II 3 D Ex tc IIIC T85 °C Dc; IP66, IP67.
- IECEx (code ER) type examination
  Ex ic IIC T6...T4 Gc, Ex tc IIIC T85 °C Dc; IP66, IP67.
- NEPSI China (code ES) type examination
  Ex ic IIC T4~T6 Gc, Ex tD A22 IP67 T85 °C.

FM Approvals US (code E6) and
FM Approvals Canada (code E4):

- Explosionproof (US): Class I, Division 1, Groups A, B, C, D; T5
- Explosionproof (Canada): Class I, Division 1, Groups B, C, D; T5
- Dust-ignitionproof: Class II, Division 1, Groups E, F, G, Class III, Division 1; T5
- Flameproof (US): Class I, Zone 1 AEx d IIC T4 Gb
- Flameproof (Canada): Class I, Zone 1 Ex d IIC T4 Gb
- Nonincendive: Class I, Division 2, Groups A, B, C, D T6...T4
- Energy limited (US): Class I, Zone 2 AEx nC IIC T6...T4
- Energy limited (Canada): Class I, Zone 2 Ex nC IIC T6...T4
- Intrinsically safe: Class I, II, III, Division 1, Groups A, B, C, D, E, F, G T6...T4
  Class I, Zone 0 AEx ia IIC T6...T4 (US)
  Class I, Zone 0 Ex ia IIC T6...T4 (Canada)

Type 4X, IP66, IP67 for all above markings.

COMBINED FM Approvals US and Canada

- Intrinsically safe (code EA)

COMBINED ATEX, FM and IECEx Approvals (code EN)
Technical Regulations Customs Union EAC (Russia, Kazakhstan, Belarus), Inmetro (Brazil)

The permissible ambient temperature ranges (within the limits of -50 to 85 °C) are specified in the type examination certificates dependent upon the temperature class.

Specification - electrical data and options

HART® digital communication and 4 to 20 mA output

Power supply

The transmitter operates from 10.5 to 42 V DC with no load and is protected against reversed polarity (additional loads enable operation above 42 V DC).
During use in Ex ia zones and in other intrinsically safe applications, the power supply must not exceed 30 V DC.

Minimum operating voltage	
12.3 V DC	Device with the option “S2 – overvoltage protection”
10.8 V DC	Devices with the option “YE – NE21 conformity”

Ripple

Max. 20 mV over a 250 Ω load as per HART specifications.

Load limitations

Total loop resistance at 4 to 20 mA and HART:

$$R\ (k\Omega) = \frac{\text{Voltage supply} - \text{Minimum operating voltage (V DC)}}{22\ \text{mA}}$$

A minimum resistance of 250 Ω is required for HART communication.

Surge protection (optional)

Up to 4 kV

- Voltage: 1.2 µs rise time / 50 µs delay time at half value
- Current: 8 µs rise time / 20 µs delay time at half value

Output signal

Two–wire output 4 – 20 mA, selectable by the operator: linear or square root output signal, characteristic curve with the exponents 3/2 or 5/2, square root for bidirectional flow, linearization table with 22 points (i.e. for level measurements in lateral, cylindric containers and spherical containers).
The HART communication provides the digital process variables which are superimposed on the 4 to 20 mA signal (protocol in accordance with Bell 202 FSK standard).

HART protocol
HART revision 7 (standard, as default)
HART revision 5 (optional, on request)

Output current limits (in accordance with NAMUR standard)

Overload condition

- Lower limit: 3.8 mA (configurable from 3.8 – 4 mA)
- Upper limit: 20.5 mA (configurable from 20 – 21 mA)

Alarm current

Adjustment range	
Minimum alarm current (low alarm current)	3.6 mA (configurable from 3.6 – 4 mA)
Maximum alarm current (high alarm current)	21 mA (configurable from 20 – 23 mA)
Maximum alarm current (high alarm current) for devices with “HART SIL – functional safety”	Limited to maximum 22 mA! (From electronic version 7.1.15)

Standard setting: high alarm current

...Specification – electrical data and options

FOUNDATION Fieldbus™ output

Model

Link Active Scheduler (LAS) capability implemented.
Manufacturer code: 000320 (hex)
Device type code: 0007 (hex)

Power supply

The transmitter operates from 9 to 32 V DC, regardless of polarity, with or without surge protection.
During use in EEx ia zones, the power supply must not exceed 24 V DC (entity certification) or 17.5 V DC (FISCO certification) according to FF-816.

Current consumption

Operating (quiescent): 15 mA
Fault current limit value: 20 mA max.

Output signal

Physical layer in accordance with IEC 11582 / EN 611582; transmission using Manchester II modulation at 31.25 kbit/s.

Function blocks/execution period

3 enhanced analog input blocks / 25 ms max. (each)
1 extended PID block / 40 ms max.
1 standard arithmetic block / 25 ms
1 standard input selector block / 25 ms
1 standard control selector block / 25 ms
1 standard signal characterization block / 25 ms
1 standard integrator / totalizer block / 25 ms

Additional blocks

1 enhanced resource block
1 manufacturer-specific pressure with calibration transducer block
1 manufacturer-specific advanced diagnostics transducer block
1 manufacturer-specific local display transducer block

Number of link objects

35

Number of VCRs

35

Output interface

FOUNDATION fieldbus digital communication protocol in accordance with standard H1, fulfills the specification V 1.7

Operating mode during transmitter mulfunction

The output signal will be "frozen" to the last value in case of significant transmitter interference, once this interference is detected by the self-diagnostics function (which also displays error states).
In the event of electronics failures or short circuits, the transmitter consumption is electronically limited to a defined value (approx. 20 mA) in order to ensure network safety.

PROFIBUS PA output

DeviceType

Pressure transmitter conform with profile 3.0.1
Indent number: 3450 (hex)

Power supply

The transmitter operates from 9 to 32 V DC, independent of the polarity with or without overvoltage protection.
During use in EEx ia zones, the operating voltage must not exceed 17.5 V DC.
Intrinsically safe installation in accordance with the FISCO model.

Input Current

Operation (quiescent current): 15 mA
Residual current limit value 20 mA maximum

Output signal

Physical layer in accordance with IEC 1158–2 / EN 61158–2, transmission with Manchester II modulation with 31.25 kBit/s.

Output interface

PROFIBUS PA communication in accordance with PROFIBUS DP 50170 part 2 / DIN 19245 part 1–3

Output cycle time

25 ms

Data blocks

1 “Physical Block”
3 “Analog Input” blocks
1 “Pressure Transducer Block” with calibration
1 “Transducer Block” local display

Operating mode during transmitter malfunction

In case of heavy transmitter errors, which are recognized by self–diagnosis, the output signal can be put into defined states, which can be chosen by the operator: safe, most recent or calculated value.
In case of electronic errors or short–circuits, the current consumption is electronically limited to a set value (approx. 20 mA) for the safety of the network.

LCD display

M10142

Figure 1 LCD display (example)

Integral LCD display (code L1)

Wide screen LCD display, 128 x 64 pixel, 52.5 x 27.2 mm (2.06 x 1.07 in), dot matrix, multilingual.
Four buttons for device configuration and management.
Easy setup for quick commissioning.
Customized visualizations which the user can select.
Total value and actual value flow indication.
The display can also be used to show static pressure, sensor temperature, and diagnosis notice, as well as make configuration settings.

Integral LCD display with TTG–(Through–The–Glass) operation (code L5)

As with the integral LCD display above, but featuring an innovative TTG (Through–The–Glass) button technology which can be used to activate the device's configuration and management menus without having to remove the transmitter housing cover.
The TTG (Through–The–Glass) buttons are protected against accidental activation.

Specification - measuring accuracy

Reference conditions according to IEC 60770.
Ambient temperature 20 °C (68 °F), rel. humidity 65 %, atmospheric pressure 1013 hPa (1013 mbar), measuring span based on zero, separating diaphragms made from ceramic, stainless steel AISI 316 L, or Hastelloy, silicone oil filling fluid, HART digital trim values equal to 4 and 20 mA span end points, linear characteristic.
Unless otherwise stated, errors are specified as a % of the span value.
Some measuring accuracy levels relating to the upper measuring range limit (URL) are affected by the current turn down (TD); i.e., the ratio of the upper measuring range limit to the set span.
FOR OPTIMUM MEASURING ACCURACY, IT IS RECOMMENDED THAT YOU SELECT THE SENSOR CODE WHICH WILL PROVIDE THE LOWEST TD VALUE.

Dynamic performance (according to IEC 61298-1)

Sensors	Time constant (63.2% of total step response)
Sensor C to V (all)	150 ms
Reaction time for all sensors	40 ms

Response time (total) = reaction time + time constant

Measuring error

% of calibrated span, consisting of terminal-based non-linearity, hysteresis, and non repeatability.
In the case of fieldbus devices, SPAN refers to the analog input function block output scaling.

Model	Sensors	for TD range	
266GST	C to V	from 1:1 to 10:1	± 0.04 %
	C	from 10:1 to 30:1	± (0.04 + 0.005 x TD - 0.05) %
	F to V	from 10:1 to 100:1	± (0.04 + 0.005 x TD - 0.05) %
	L to R	from 1:1 to 10:1	± 0.025 % (optional)
266AST	C to R	from 1:1 to 10:1	± 0.04 %
	C to R	from 10:1 to 20:1	± (0.04 + 0.005 x TD - 0.05) %

Ambient Temperature

Per 20 K change within the limits of -40 to 85 °C (per 36 °F change within the limits of -40 to 185 °F):

Model	Sensors	for TD up to	
266GST	C and F	10:1	± (0.06 % URL + 0.09 % span)
	L to V	10:1	± (0.03 % URL + 0.045 % span)
266AST	C and F	10:1	± (0.06 % URL + 0.09 % span)
	L to R	10:1	± (0.03 % URL + 0.045 % span)

In the case of an ambient temperature change between -10 and 60 °C (14 and 140 °F):

Model	Sensor	for TD up to	
266GST	C and F	10:1	± (0.08 % URL + 0.08 % span)
	L to V	10:1	± (0.06 % URL + 0.06 % span)
266AST	C and F	10:1	± (0.2 % URL + 0.1 % span)
	L to R	10:1	± (0.06 % URL + 0.06 % span)

Per 10 K change within the limits of -40 to -10 °C or 60 to 85 °C (per 18 °F change within the limits of -40 to 14 °F or 140 to 185 °F):

Model	Sensor	for TD up to	
266GST	C and F	10:1	± (0.04 % URL + 0.05 % span)
	L to V	10:1	± (0.03 % URL + 0.045 % span)
266AST	C and F	10:1	± (0.1 % URL + 0.05 % span)
	L to R	10:1	± (0.03 % URL + 0.045 % span)

Power supply

Within the limit values for the voltage / load, the total influence is less than 0.005 % of the upper measuring range limit per volt.

Load

Within the load / voltage limits, the total influence is negligible.

Electromagnetic field

Meets all requirements of EN 61326 and NAMUR NE-21.

Common-mode interference

No influence from 100 V rms @ 50 Hz, or 50 V DC

Mounting position

The recommended mounting position is vertical, with the process connection pointing downward.
Any deviations from this position will lead to a zero error, which can be corrected by setting the zero point. With measuring range codes C and F, a deviation of 90° has an additional effect on the ambient temperature of up to 0.02 mbar/10K

Long-term stability

± 0.15 % of URL over a period of 10 years
(± 0.05 % URL/year)

Total performance

Temperature change of 28 °C (50 °F),
only 266GST: with base accuracy option D1 (0.025 %)

Model	Sensor	for TD	Total performance
266GST	L to R	1:1	± 0.108 % of calibrated span
266AST	C to R	1:1	± 0.112 % of calibrated span

Within a temperature change range of -10 to 60 °C (14 to 140 °F) (DIN 16086),
only 266GST: with base accuracy option D1 (0.025 %)

Model	Sensor	for TD	Total performance
266GST	L to R	1:1	± 0.123 % of calibrated span
266AST	C to R	1:1	± 0.126 % of calibrated span

The total performance accuracy includes the measuring error (non-linearity including hysteresis and non repeatability), as well as the thermal change in the ambient temperature as regards the zero signal and span.

$$E_{perf} = \sqrt{(E_{\Delta Tz} + E_{\Delta Ts})^2 + E_{\Delta Ps}{}^2 + E_{lin}{}^2}$$

E_{perf} = Total performance
$E_{\Delta}TZ$ = Effect of the ambient temperature on the zero signal
$E_{\Delta}TZ$ = Effect of the ambient temperature on the measuring span
E_{lin} = Measuring error

Specification – physical

(Please refer to the order information to check the availability of different versions of the relevant model)

Materials

Process isolating diaphragms *

Hastelloy C276; Hastelloy C276, gold plated; stainless steel AISI 316L (1.4435)

Process connection *

Stainless steel AISI 316L (1.4404), Hastelloy C276

Sensor filling fluid

Silicone oil; fluorocarbon (Galden); white oil (FDA)

Mounting bracket **

Barrel version:
Galvanized C steel with chromium passivation;
Stainless steel AISI 316L (1.4404)
DIN version:
AISI 304 (1.4301)

Pressure sensor housing

Stainless steel AISI 316L (1.4404)

Electronics housing and cover

Aluminum alloy (copper content ≤ 0.3 %) with baked epoxy finish (color RAL9002); stainless steel AISI 316L.

O-ring cover

Buna N

Operating element for local zero point, measuring span, and write protection settings

Non–intrusive design (removable) made of glass fiber reinforced polypropylene oxide.

Plates

Transmitter name plate: Stainless steel AISI 316 fastened to the electronics housing.
Certification plate and optional measuring point tag plate / settings plate: Adhesive, fastened to the electronics housing or stainless steel AISI 316L fastened to the electronics housing with rivets or screws.
Optional tag plate with customer data:
Stainless steel AISI 316L.

The metal plates are laser engraved, the adhesive signs thermo–printed.
For stainless steel housings AISI 316L, the order option I2 or I3 must be selected for plates made from stainless steel AISI 316.

Calibration

Standard: 0 to measuring range upper limit, for ambient temperature and atmospheric pressure
Optional: To specified measuring span

* Transmitter parts that come into contact with fluid

** U-bolt material: stainless steel AISI 400;
screw material: high-strength alloy steel or stainless steel AISI 316

Optional extras

Mounting bracket

For 60 mm (2 in) pipes or wall mounting

LCD display

Can be rotated in 90° increments into 4 positions

Additional tag plates

Code I2: For measuring point tag (up to 30 characters) and calibration specifications (up to 30 characters: lower and upper value plus unit), attached to transmitter housing.
Code I1: For customer data (4 lines with 30 characters each), wired to transmitter housing

Overvoltage protection

- Code S2

Cleaning stage for oxygen application (O2)

Code P1

Certificates (inspection, implementation, characteristics, material certificate)

Code Cx and Hx

Name plate and operating instruction language

Code Tx and Mx

Communication plug connector

Code Ux

Valve manifold installation

Code A1: Factory installation and pressure test of the ABB

M26 valve manifold.

Process connections

1/2 – 14 NPT internal or external thread;
DIN EN 837-1 G 1/2 B or G 1/2 B (HP) for convex seals; flush diaphragm; for ball valve

Electrical connections

Two 1/2-14 NPT or M20 x 1.5 threaded bores for cable glands, directly on housing.
Special communication connector (on request)

- HART: Straight or angled Harting Han 8D connector and one mating plug.
- FOUNDATION fieldbus, PROFIBUS PA: M12 x 1 or 7/8 in plug

Terminals

HART version: Three connections for signal / external display, for wire cross sections of up to 2.5 mm2 (14 AWG), and connection points for testing and communication purposes
Fieldbus versions: Two signal connections (bus connection) for wire cross sections of up to 2.5 mm2 (14 AWG)

Grounding

Internal and external ground terminals are provided for 6 mm2 (10 AWG) wire cross sections.

Mounting position

The transmitters can be installed in any position.
The electronic housing can be rotated into any position. A stop is provided to prevent overturning.

Weight

Approx. 2 kg (4.4 lb); additional 1.5 kg (3.3 lb) for stainless steel housing.
Add 650 g (1.5 lb) for packaging.

Packaging

Carton with dimensions of 25 x 20 x 14 cm, approx. (10 x 8 x 6 in)

Specification – configuration

Transmitter with HART communication and 4 to 20 mA

Standard configuration

Transmitters are calibrated at the factory to the customer's specified measuring range. The calibrated range and measuring point number are provided on the name plate. If this data has not been specified, the transmitter will be delivered with the plate left blank and the following configuration:

Physical unit	kPa
4 mA	Zero
20 mA	Measuring range upper limit (URL)
Output	Linear
Damping	1 s
Transmitter interference mode	High alarm
Software tag (max. 8 characters)	Blank
Optional LCD display	PV in kPa; output in mA and in percent as bargraph

Any or all of the configurable parameters listed above - including the lower and upper range values (with the same unit of measurement) - can easily be changed using a portable HART handheld communicator or a PC running the configuration software with the DTM for 266 models. Specifications concerning the flange type and materials, O-ring and vent / drain valve materials, and additional device options are stored in the transmitter database.

Customer-specific configuration (option N6)

The following information can be specified in addition to the standard configuration parameters:

Description	16 alphanumeric characters
Supplementary information	32 alphanumeric characters
Date	Day, month, year

For the HART protocol, the following physical units are available for pressure measurements:
Pa, kPa, MPa
inH2O @ 4 °C, mmH2O @ 4 °C, psi
inH2O @ 20 °C, ftH2O @ 20 °C, mmH2O @ 20 °C
inHg, mmHg, Torr
g/cm2, kg/cm2, atm
mbar, bar
These and others are available for PROFIBUS and FOUNDATION fieldbus.

Transmitter with PROFIBUS PA communication

Standard configuration

Transmitters are calibrated at the factory to the customer's specified measuring range. The calibrated range and measuring point number are provided on the name plate. If this data has not been specified, the transmitter will be delivered with the plate left blank and the following configuration:

Measuring profile	Pressure
Physical unit	kPa
Output scale 0 %	Measuring range lower limit (LRL)
Output scale 100 %	Measuring range upper limit (URL)
Output	Linear
Upper alarm limit	Measuring range upper limit (URL)
Upper warning limit	Measuring range upper limit (URL)
Lower warning limit	Measuring range lower limit (LRL)
Lower alarm limit	Measuring range lower limit (LRL)
Hysteresis limit value	0.5 % of output scaling
PV filter time	0 s
Address (set using local control buttons)	126
Measuring point tag	30 alphanumeric characters
Optional LCD display	PV in kPa; output in percent as bargraph display

Any or all of the configurable parameters listed above - including the measuring range values (with the same unit of measurement) - can easily be changed using a PC running the configuration software with the DTM for 266 models. Specifications concerning the flange type and materials, O-ring and vent / drain valve materials, and additional device options are stored in the transmitter database.

Customer-specific configuration (option N6)

The following information can be specified in addition to the standard configuration parameters:

Description	32 alphanumeric characters
Supplementary information	32 alphanumeric characters
Date	Day, month, year

Transmitter with FOUNDATION fieldbus communication

Standard configuration

Transmitters are calibrated at the factory to the customer's specified measuring range. The calibrated range and measuring point number are provided on the name plate. If this data has not been specified, the transmitter will be delivered with the plate left blank and the analog input function block FB1 will be configured as follows:

Measuring profile	Pressure
Physical unit	kPa
Output scale 0 %	Measuring range lower limit (LRL)
Output scale 100 %	Measuring range upper limit (URL)
Output	Linear
Upper alarm limit	Measuring range upper limit (URL)
Upper warning limit	Measuring range upper limit (URL)
Lower warning limit	Measuring range lower limit (LRL)
Lower alarm limit	Measuring range lower limit (LRL)
Hysteresis limit value	0.5 % of output scaling
PV filter time	0 s
Measuring point tag	30 alphanumeric characters
Optional LCD display	PV in kPa; output in percent as bargraph display

The analog input function blocks FB2 and FB3 are each configured for the sensor temperature measured in °C and the static pressure measured in MPa. Any or all of the configurable parameters listed above - including the measuring range values - can easily be changed using a FOUNDATION fieldbus-compatible configuration tool. Specifications concerning the flange type and materials, O-ring and vent / drain valve materials, and additional device options are stored in the transmitter database.

Customer-specific configuration (option N6)

The following information can be specified in addition to the standard configuration parameters:

Description	32 alphanumeric characters
Supplementary information	32 alphanumeric characters
Date	Day, month, year

Dimensions

(not design data) – dimensions in mm (inch)

Transmitter with barrel housing – 1/2 NPT female thread

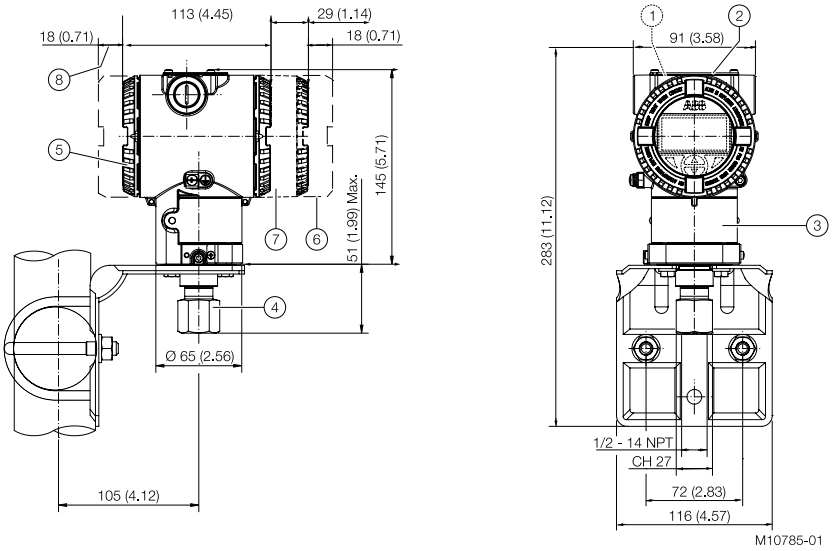

Figure 2: Dimensions - Barrel housing – 1/2 NPT female thread

1 Settings | 2 Name plate | 3 Certification plate | 4 Process connection | 5 Terminal side | 6 LCD display housing cover | 7 Electronics side | 8 Space for removing the cover

Transmitter with DIN aluminum housing – 1/2 NPT external thread

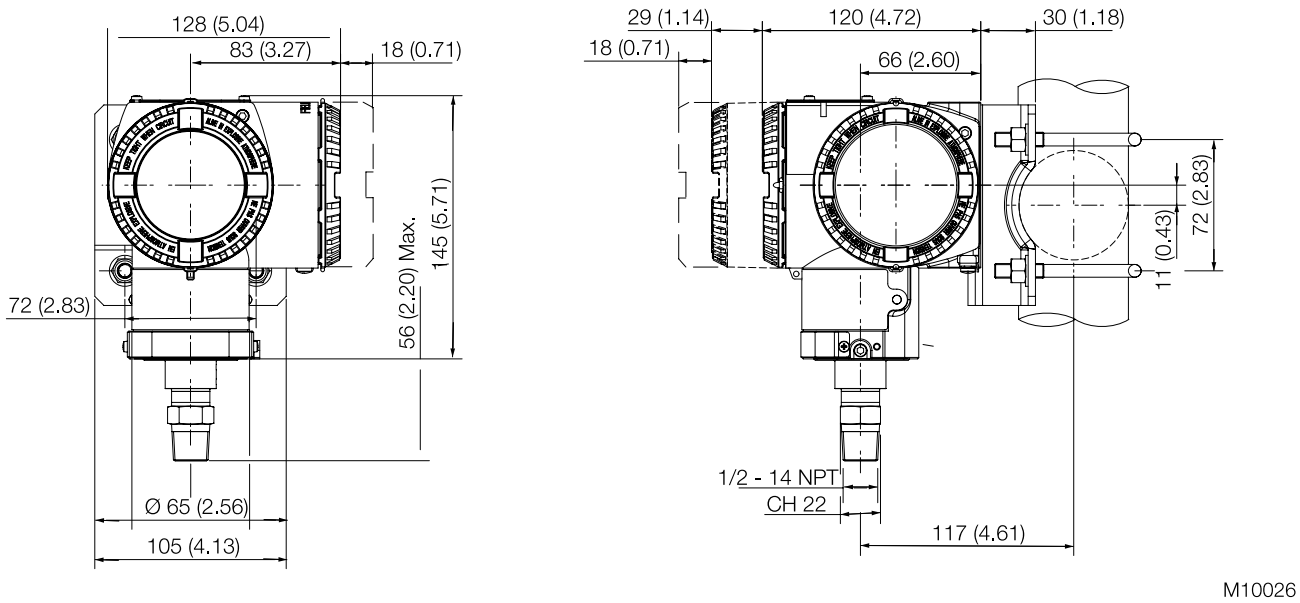

Figure 3: Dimensions - DIN aluminum housing – 1/2 NPT external thread

Transmitter with barrel housing – DIN-EN837-1 G 1/2 B connection

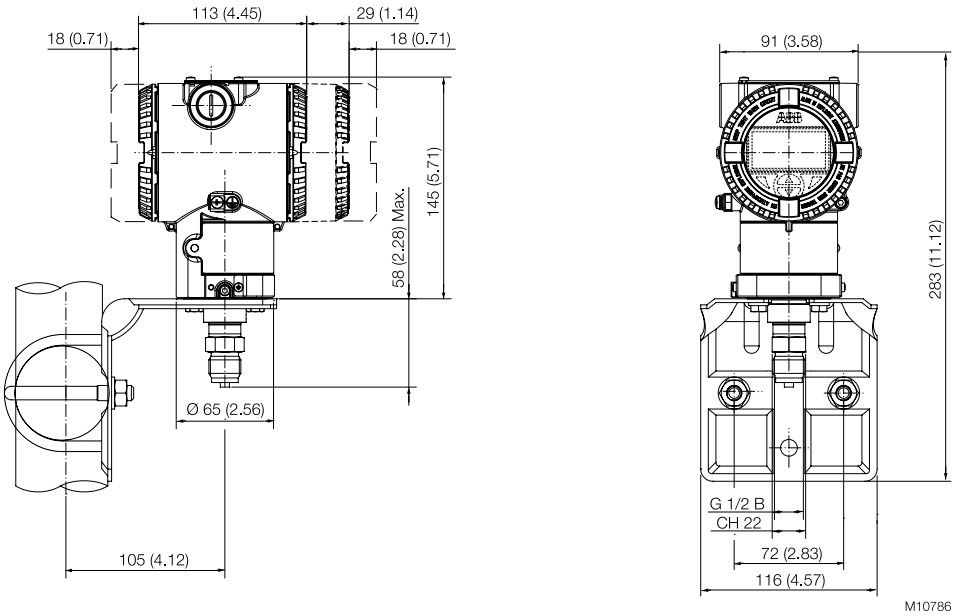

Figure 4: Dimensions - Barrel housing – DIN-EN837-1 G 1/2 B connection

Electrical connections

HART version

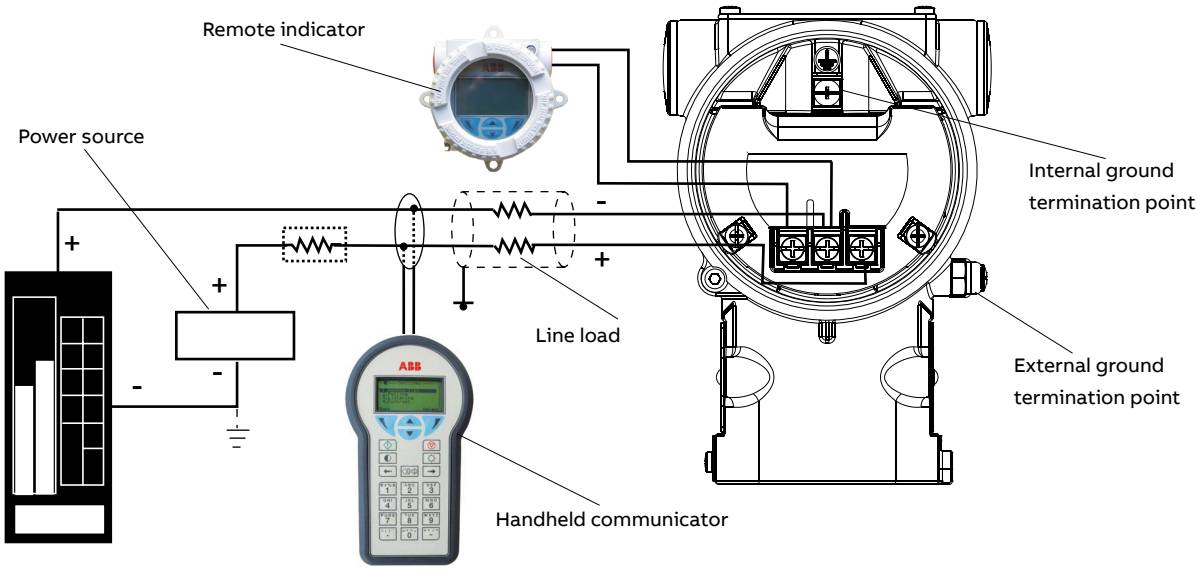

Figure 4: Electrical connection – HART Version

The HART handheld terminal can be connected to any wiring termination point in the loop as long as a minimum resistance of 250 Ω is present between handheld terminal and transmitter power supply. If it is less than 250 Ω, additional resistance wires must be installed to enable a communication.

Fieldbus version

Figure 5: Plug connectors – fieldbus versions

Pin assignment (plug)		
Pin number	FOUNDATION Fieldbus	PROFIBUS PA
1	DATA –	DATA +
2	DATA +	GROUND
3	SHIELD	DATA –
4	GROUND	SHIELD

Delivery scope: plug connector without mating plug (female connector) supplied loose.

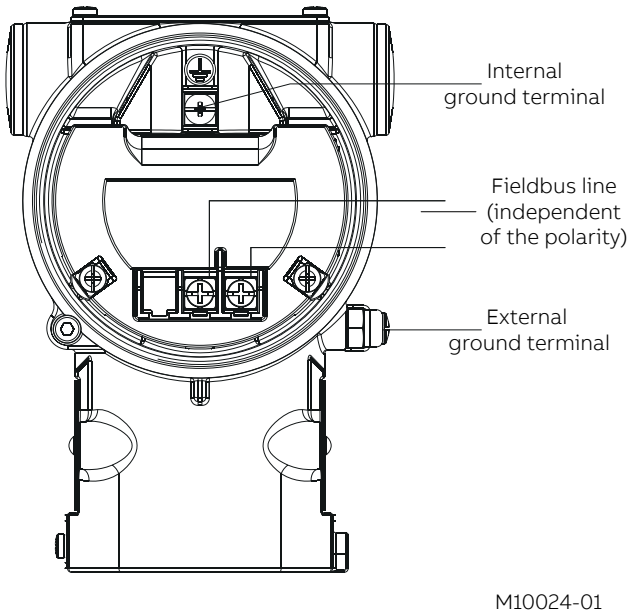

Figure 6: Standard terminal block

HART version

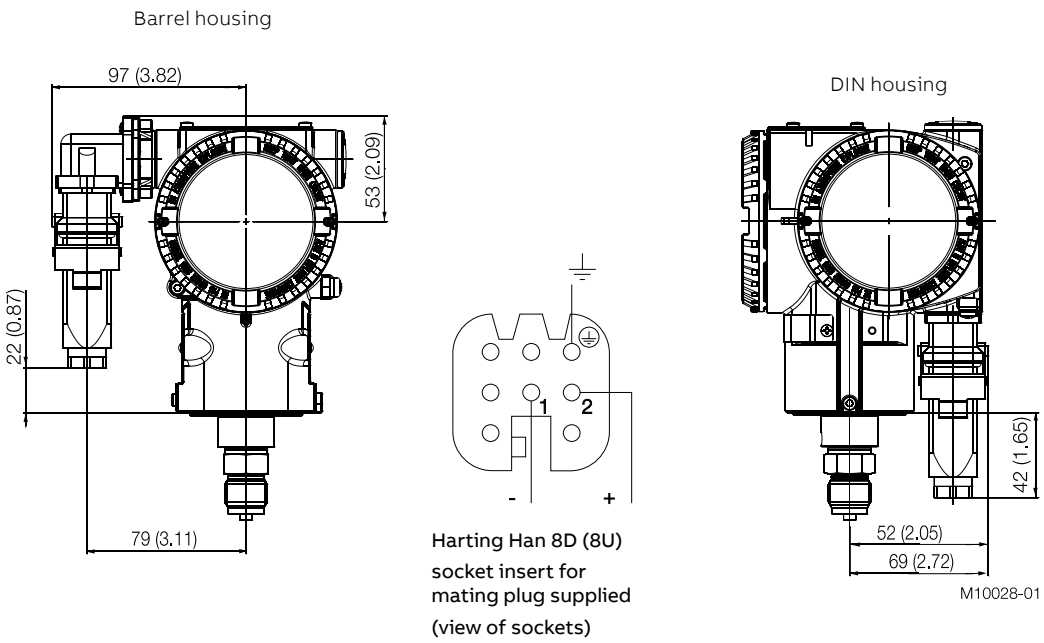

Figure 7: Harting Han connection – HART Version

Ordering information

Main ordering information for model 266GST gauge pressure transmitter

Select one or more characters from each category and enter the complete catalog number.

Enter one or more codes for additional order information if you are purchasing optional extras for each transmitter.

Base model - 1st to 6th characters				**2 6 6 G S T**	**X**	**X**	**X**	**X**	**X**	**X**
Gauge pressure transmitter – Base accuracy 0.04 %										
Sensor Span Limits / overpressure limit – 7th character								continued on next page		
0.2 and 6 kPa	(2 and 60 mbar, 0.8 and 24 inH2O)	1 MPa (10 bar, 145 psi)			C					
0.4 and 40 kPa	(4 and 400 mbar, 1.6 and 160 inH2O)	1 MPa (10 bar, 145 psi)			F					
2.5 and 250 kPa	(25 and 2500 mbar, 10 and 1000 inH2O)	3 MPa (30 bar, 435 psi)			L					
10 and 1000 kPa	(0.1 and 10 bar, 1.45 and 145 psi)	6 MPa (60 bar, 870 psi)			D					
30 and 3000 kPa	(0.3 and 30 bar, 4.35 and 435 psi)	6 MPa (60 bar, 870 psi)			U					
100 and 10000 kPa	(1 and 100 bar, 14.5 and 1450 psi)	30 MPa (300 bar, 4350 psi)			R					
600 and 60000 kPa	(6 and 600 bar, 87 and 8700 psi)	90 MPa (900 bar, 13050 psi)			V					
Diaphragm material / filling fluid – 8th character										
Stainless steel AISI 316L (1.4435)	Silicone oil (Only available with front bonded diaphragm)		NACE			S				
Hastelloy® C-276	Silicone oil		NACE			K				
Stainless steel AISI 316L (1.4435)	Fluorocarbon - Galden									
(Only available with front bonded diaphragm, suited to oxygen applications)			NACE			A				
Hastelloy® C-276	Fluorocarbon - Galden (suited to oxygen applications)		NACE			F				
Hastelloy® C-276 gold-plated	Silicone oil		NACE	(Note: 1)		G				
Hastelloy® C-276 gold plated	Fluorocarbon - Galden (suited to oxygen applications)		NACE	(Note: 1)		E				
Stainless steel AISI 316L (1.4435)	White oil (FDA)									
(Only available with front bonded diaphragm)			NACE			6				
Hastelloy® C-276	White oil (FDA)		NACE			Z				
Process connection material / type – 9th character										
Stainless steel AISI 316L (1.4404)	1/2 in -14 NPT female		NACE				B			
Stainless steel AISI 316L (1.4404)	DIN EN 837-1 G 1/2 in B		NACE				P			
Stainless steel AISI 316L (1.4404)	G 1/2 in, in front bonded diaphragm		NACE	(Note: 1)			S			
Stainless steel AISI 316L (1.4404)	1/2 in -14 NPT male		NACE				T			
Stainless steel AISI 316L (1.4404)	DIN EN 837-1 G 1/2 in B		NACE	(Note: 1)			U			
Stainless steel AISI 316L (1.4404)	For ball valve connection		NACE	(Note: 2)			V			
Hastelloy® C-276	1/2 in -14 NPT female		NACE				E			
Hastelloy® C-276	DIN EN 837-1 G 1/2 in B		NACE				D			
Hastelloy® C-276	1/2 in -14 NPT male		NACE				K			

				X	X	X
Gasket Material – 10th character						
None				N		
Housing Material / Electrical Connection – 11th character						
Aluminium alloy (Barrel type)	1/2 in -14 NPT				A	
Aluminium alloy (Barrel type)	M20 x 1.5				B	
Aluminium alloy (Barrel type)	Harting Han connector		(Note: 3)		E	
Aluminium alloy (Barrel type)	Fieldbus connector		(Note: 3)		G	
AISI 316L SST (barrel type)	1/2 in -14 NPT (I2 or I3 required)				S	
AISI 316L SST (barrel type)	M20 x 1.5 (I2 or I3 required)				T	
Aluminium alloy (DIN type)	M20 x 1.5				J	
Aluminium alloy (DIN type)	Harting Han connector	(General purpose only)	(Note: 3)		K	
Aluminium alloy (DIN type)	Fieldbus connector	(General purpose only)	(Note: 3)		W	
AISI 316L SST (barrel type)	Fieldbus connector	(General purpose only)	(Note: 3)		Z	
Output – 12th character						
HART digital communication and 4 to 20 mA			(Note: 7)			1
PROFIBUS PA			(Note: 8)			2
FOUNDATION fieldbus			(Note: 8)			3
HART digital communication and 4 to 20 mA, SIL2 and SIL3-certified in acc. with IEC 61508			(Note: 7)			8

...Ordering information

...Additional ordering information for model 266GST gauge pressure transmitter

		XX	XX	XX	XX
Accuracy					
Base accuracy 0.025%	(Note: 4)	D1			
Explosion Protection Certification					
ATEX Intrinsic Safety Ex ia	(Note: 9)		E1		
ATEX Explosion Proof Ex db_tb	(Note: 10)		E2		
ATEX Intrinsic Safety Ex ic_tc	(Note: 9)		E3		
FM Approvals (Canada) approval (XP, DIP, IS, NI)	(Note: 10)		E4		
FM Approvals (USA) approval (XP, DIP, IS, NI)	(Note: 10)		E6		
FM Approvals (USA and Canada) Intrinsically safe	(Note: 9)		EA		
FM Approvals (USA and Canada) Explosionproof	(Note: 10)		EB		
FM Approvals (USA and Canada) Nonincendive	(Note: 9)		EC		
Combined ATEX, IECEx and FM Approvals (USA and Canada)	(Note: 10)		EN		
Combined ATEX Ex ia, Ex db_tc and Ex ic_tc	(Note: 10)		EW		
IECEx Intrinsic Safety Ex ia	(Note: 9)		E8		
IECEx Explosion Proof Ex db_tb	(Note: 10)		E9		
IECEx Intrinsic Safety Ex ic_tc	(Note: 9)		ER		
Combined IEC Approval Ex ia and Ex db_tb	(Note: 10)		EH		
Combined IEC Approval Ex ia, Ex db_tb and Ex ic_tc	(Note: 10)		EI		
NEPSI Intrinsic Safety Ex ia_iaD	(Note: 9)		EY		
NEPSI Explosion Proof Ex d_tD	(Note: 10)		EZ		
NEPSI Intrinsic Safety Ex ic_nA_tD	(Note: 9)		ES		
Combined NEPSI Ex ia_iaD and Ex d_tD	(Note: 10)		EP		
Combined NEPSI Ex ia_iaD, Ex d_tD and Ex ic_nA_tD	(Note: 10)		EQ		
Other Explosion Protection Certifications					
For TR CU EAC Ex ia for Russia (incl. GOST Metrologic Approval)	(Note: 9)			W1	
For TR CU EAC Ex d for Russia (incl. GOST Metrologic Approval)	(Note: 10)			W2	
For TR CU EAC Ex ia for Kazakhstan (incl. GOST Metrologic Approval)	(Note: 9)			W3	
For TR CU EAC Ex d for Kazakhstan (incl. GOST Metrologic Approval)	(Note: 10)			W4	
For TR CU EAC Ex ia for Belarus (incl. GOST Metrologic Approval)	(Note: 9)			WF	
For TR CU EAC Ex d for Belarus (incl. GOST Metrologic Approval)	(Note: 10)			WG	
Integral LCD display					
With integral LCD display					L1
With integral touch screen LCD display (TTG)					L5

	XX	XX	XX	XX	XX	XX	XX	XX
Mounting Bracket Shape / Material								
For horizontal or vertical pipe and wall mounting / carbon steel (Not suitable for AISI housing)	B6							
For horizontal or vertical pipe and wall mounting / AISI 316L (1.4401)	B7							
Surge								
Surge/Transient Protector		S2						
Language of documentation								
German			M1					
Italian			M2					
Spanish			M3					
French			M4					
English			M5					
Swedish			M7					
Polish			M9					
Portuguese			MA					
Turkish			MT					
Language for labels and tags								
German				T1				
Italian				T2				
Spanish				T3				
French				T4				
Additional Tag Plate								
Supplemental wired-on stainless steel plate					I1			
Tag and certification stainless steel plates and laser printing of tag					I2			
Tag, certification and supplemental wired-on stainless steel plates and laser printing of tag					I3			
Configuration								
Standard pressure = inH2O / psi at 68 °F						N2		
Standard pressure = inH2O / psi at 39.2 °F						N3		
Standard pressure = inH2O / psi at 20 °C						N4		
Standard pressure = inH2O / psi at 4 °C						N5		
Custom						N6		
Configured for HART revision 5 (Note: 5)						NH		
Preparation procedure								
Oxygen service clening, Pmax = 10 MPa (100 bar, 1450 psi) or sensor overpressure (lower value), Tmax = 60 °C / 140 °F (Only available with inert fill)							P1	
Certificates								
Inspection certificate 3.1 to EN 10204 of calibration								C1
Inspection certificate 3.1 to EN 10204 of cleaning stage								C3
Inspection certificate 3.1 to EN 10204 of helium leakage test of measuring chamber								C4
Inspection certificate 3.1 to EN 10204 of pressure test								C5
Certificate of compliance with the order EN 10204–2.1 of instrument design								C6
With device data log								CG
PMI test of wetted parts								CT

...Ordering information

...Additional ordering information for model 266GST gauge pressure transmitter

		XX	XX	XX	XX
Approvals					
Metrologic Pattern for Russia	(NOT APPLICABLE WITH ANY HAZARDOUS AREA CERTIFICATION)	Y1			
Metrologic Pattern for Kazakhstan	(NOT APPLICABLE WITH ANY HAZARDOUS AREA CERTIFICATION)	Y2			
Metrologic Pattern for Ukraine	(NOT APPLICABLE WITH ANY HAZARDOUS AREA CERTIFICATION)	Y3			
Metrologic Pattern for Belarus	(NOT APPLICABLE WITH ANY HAZARDOUS AREA CERTIFICATION)	Y4			
DNV GL approval		YA			
Conformity to NAMUR NE 021 (2004)	(NOT APPLICABLE WITH SURGE PROTECTOR CODE "S2") (Note: 5, 11)	YE			
Material Traceability					
Inspection certificate EN 10204–3.1 of process wetted parts (not for gaskets)	(Note: 6)		H3		
Test report EN 10204–2.2 of pressure bearing and process wetted parts (not for gaskets)			H4		
Plug connector					
Fieldbus 7/8 in (Recommended for FOUNDATION Fieldbus, supplied loose, without mating plug)				U1	
Fieldbus M12 x 1 (Recommended for PROFIBUS PA, supplied loose, without mating plug)				U2	
Harting Han 8D (8U), straight entry				U3	
Harting Han 8D (8U), angle entry				U4	
Harting Han 7D				U5	
Harting Han 8D (8U), for four-wire accessory unit				U6	
Harting Han 7D, for four-wire accessory unit				U7	
With cable gland M20 x 1.5 (Plastic, black, supplied loose)				U8	
Housing accessories					
Manifold mounting and pressure test (NOT AVAILABLE WITH OXYGEN SERVICE CLEANING - PREPARATION PROCEDURE CODE P1)					A1

Note 1: Not available with sensor span limits / overpressure limit Code C, F
Note 2: Not available with sensor span limits / overpressure limit Code C, F, V
Note 3: Select connector with additional order code
Note 4: Only available with sensor span limits / overpressure limit Code L, D, U, R
Note 5: Not available with Output code 2, 3
Note 6: Minor parts with factory certificate according to EN 10204
Note 7: Not available with housing material / electrical connection code G, W, Z
Note 8: Not available with housing material / electrical connection code E, K
Note 9: Not available with housing material / electrical connection code E, G, K, W, Z
Note 10: Not available with housing material / electrical connection code E, G, J, K, W, Z
Note 11: Not available with Hazardous area certification code E4, E6, EA, EB, EC, EN, EY, EZ, ES, EP, EQ, W1, W2, W3, W4, WF, WG

Standard delivery scope (changes possible with additional ordering code)

- For standard applications (without explosion protection)
- No display, no mounting bracket, no surge protection
- Multilanguage short-form operating instruction and English labeling
- Configuration with kPa and °C units
- No test, inspection, or material certificates

Unless otherwise specified prior to manufacture, the customer shall be responsible for selecting suitable wetted parts and an appropriate filling fluid in order to ensure compatibility with the measuring fluid.
Compliance with the NACE regulation is based on recommendations MR0175 / ISO 15156. Additionally, stainless steel AISI 316, AISI 316L and Hastelloy C-276 automatically meet the criteria of MR0103, provided that they also meet the criteria of MR0175.

Ordering information

Main ordering information for model 266AST absolute pressure transmitter

Select one or more characters from each category and enter the complete catalog number.

Enter one or more codes for additional order information if you are purchasing optional extras for each transmitter.

Base model - 1st to 6th characters				**2 6 6 A S T**	**X**	**X**	**X**	**X**	**X**	**X**
Absolute pressure transmitter – Base accuracy 0.04 %										
Sensor Span Limits / overpressure limit – 7th character								continued on next page		
0.3 and 6 kPa	(3 and 60 mbar, 2.25 and 45 mmHg)	1 MPa (10 bar, 145 psi)			C					
2 and 40 kPa	(20 and 400 mbar, 15 and 300 mmHg)	1 MPa (10 bar, 145 psi)			F					
12.5 and 250 kPa	(125 and 2500 mbar, 98.3 and 1875 mmHg)	3 MPa (30 bar, 435 psi)			L					
50 and 1000 kPa	(0.5 and 10 bar, 7.25 and 145 psi)	6 MPa (60 bar, 870 psi)			D					
150 and 3000 kPa	(1.5 and 30 bar, 21.7 and 435 psi)	6 MPa (60 bar, 870 psi)			U					
500 and 10000 kPa	(5 and 100 bar, 72.5 and 1450 psi)	30 MPa (300 bar, 4350 psi)			R					
Diaphragm material / filling fluid – 8th character										
Stainless steel AISI 316L (1.4435)	Silicone oil (Only available with front bonded diaphragm)	NACE				S				
Hastelloy® C-276	Silicone oil	NACE				K				
Stainless steel AISI 316L (1.4435)	Fluorocarbon - Galden									
(Only available with front bonded diaphragm, suited to oxygen applications)		NACE				A				
Hastelloy® C-276	Fluorocarbon - Galden (suited to oxygen applications)	NACE				F				
Hastelloy® C-276 gold-plated	Silicone oil	NACE	(Note: 1)			G				
Hastelloy® C-276 gold plated	Fluorocarbon - Galden (suited to oxygen applications)	NACE	(Note: 1)			E				
Stainless steel AISI 316L (1.4435)	White oil (FDA)									
(Only available with front bonded diaphragm)		NACE				6				
Hastelloy® C-276	White oil (FDA)	NACE				Z				
Process connection material / type – 9th character										
Stainless steel AISI 316L (1.4404)	1/2 in -14 NPT female	NACE					B			
Stainless steel AISI 316L (1.4404)	DIN EN 837-1 G 1/2 in B	NACE					P			
Stainless steel AISI 316L (1.4404)	G 1/2 in, in front bonded diaphragm	NACE	(Note: 1)				S			
Stainless steel AISI 316L (1.4404)	1/2 in -14 NPT male	NACE					T			
Hastelloy® C-276	1/2 in -14 NPT female	NACE					E			
Hastelloy® C-276	DIN EN 837-1 G 1/2 in B	NACE					D			
Hastelloy® C-276	1/2 in -14 NPT male	NACE					K			

...Ordering information

...Main ordering information for model 266AST absolute pressure transmitter

				X	X	X
Gasket Material – 10th character						
None				N		
Housing Material / Electrical Connection – 11th character						
Aluminium alloy (Barrel type)	1/2 in -14 NPT				A	
Aluminium alloy (Barrel type)	M20 x 1.5				B	
Aluminium alloy (Barrel type)	Harting Han connector		(Note: 2)		E	
Aluminium alloy (Barrel type)	Fieldbus connector		(Note: 2)		G	
Stainless steel (barrel type)	1/2 in -14 NPT (I2 or I3 required)				S	
Stainless steel (barrel type)	M20 x 1.5 (I2 or I3 required)				T	
Aluminium alloy (DIN type)	M20 x 1.5				J	
Aluminium alloy (DIN type)	Harting Han connector	(General purpose only)	(Note: 2)		K	
Aluminium alloy (DIN type)	Fieldbus connector	(General purpose only)	(Note: 2)		W	
Stainless steel (barrel type)	Fieldbus connector	(General purpose only)	(Note: 2)		Z	
Output – 12th character						
HART digital communication and 4 to 20 mA			(Note: 5)			1
PROFIBUS PA			(Note: 6)			2
FOUNDATION fieldbus			(Note: 6)			3
HART digital communication and 4 to 20 mA, SIL2 and SIL3-certified in acc. with IEC 61508			(Note: 5)			8

		XX	XX	XX
Explosion Protection Certification				
ATEX Intrinsic Safety Ex ia	(Note: 7)	E1		
ATEX Explosion Proof Ex db_tb	(Note: 8)	E2		
ATEX Intrinsic Safety Ex ic_tc	(Note: 7)	E3		
FM Approvals (Canada) approval (XP, DIP, IS, NI)	(Note: 8)	E4		
FM Approvals (USA) approval (XP, DIP, IS, NI)	(Note: 8)	E6		
FM Approvals (USA and Canada) Intrinsically safe	(Note: 7)	EA		
FM Approvals (USA and Canada) Explosionproof	(Note: 8)	EB		
FM Approvals (USA and Canada) Nonincendive	(Note: 7)	EC		
Combined ATEX, IECEx and FM Approvals (USA and Canada)	(Note: 8)	EN		
Combined ATEX Ex ia, Ex db_tc and Ex ic_tc	(Note: 8)	EW		
IECEx Intrinsic Safety Ex ia	(Note: 7)	E8		
IECEx Explosion Proof Ex db_tb	(Note: 8)	E9		
IECEx Intrinsic Safety Ex ic_tc	(Note: 7)	ER		
Combined IEC Approval Ex ia and Ex db_tb	(Note: 8)	EH		
Combined IEC Approval Ex ia, Ex db_tb and Ex ic_tc	(Note: 8)	EI		
NEPSI Intrinsic Safety Ex ia_iaD	(Note: 7)	EY		
NEPSI Explosion Proof Ex d_tD	(Note: 8)	EZ		
NEPSI Intrinsic Safety Ex ic_nA_tD	(Note: 7)	ES		
Combined NEPSI Ex ia_iaD and Ex d_tD	(Note: 8)	EP		
Combined NEPSI Ex ia_iaD, Ex d_tD and Ex ic_nA_tD	(Note: 8)	EQ		
Other Explosion Protection Certifications				
For TR CU EAC Ex ia for Russia (incl. GOST Metrologic Approval)	(Note: 7)		W1	
For TR CU EAC Ex d for Russia (incl. GOST Metrologic Approval)	(Note: 8)		W2	
For TR CU EAC Ex ia for Kazakhstan (incl. GOST Metrologic Approval)	(Note: 7)		W3	
For TR CU EAC Ex d for Kazakhstan (incl. GOST Metrologic Approval)	(Note: 8)		W4	
For TR CU EAC Ex ia for Belarus (incl. GOST Metrologic Approval)	(Note: 7)		WF	
For TR CU EAC Ex d for Belarus (incl. GOST Metrologic Approval)	(Note: 8)		WG	
Integral LCD display				
With integral LCD display				L1
With integral touch screen LCD display (TTG)				L5

...Ordering information

...Additional ordering information for model 266AST absolute pressure transmitter

	XX	XX	XX	XX	XX	XX	XX	XX
Mounting Bracket Shape / Material								
For horizontal or vertical pipe and wall mounting / carbon steel (Not suitable for AISI housing)	B6							
For horizontal or vertical pipe and wall mounting / AISI 316L (1.4401)	B7							
Surge								
Surge/Transient Protector		S2						
Language of documentation								
German			M1					
Italian			M2					
Spanish			M3					
French			M4					
English			M5					
Swedish			M7					
Polish			M9					
Portuguese			MA					
Turkish			MT					
Language for labels and tags								
German				T1				
Italian				T2				
Spanish				T3				
French				T4				
Additional Tag Plate								
Supplemental wired-on stainless steel plate					I1			
Tag and certification stainless steel plates and laser printing of tag					I2			
Tag, certification and supplemental wired-on stainless steel plates and laser printing of tag					I3			
Configuration								
Standard pressure = inH2O / psi at 68 °F						N2		
Standard pressure = inH2O / psi at 39.2 °F						N3		
Standard pressure = inH2O / psi at 20 °C						N4		
Standard pressure = inH2O / psi at 4 °C						N5		
Custom						N6		
Configured for HART revision 5 (Note: 3)						NH		
Preparation procedure								
Oxygen service clening, Pmax = 10 MPa (100 bar, 1450 psi) or sensor overpressure (lower value), Tmax = 60 °C / 140 °F (Only available with fluorocarbon filling)							P1	
Certificates								
Inspection certificate 3.1 to EN 10204 of calibration								C1
Inspection certificate 3.1 to EN 10204 of cleaning stage								C3
Inspection certificate 3.1 to EN 10204 of helium leakage test of measuring chamber								C4
Inspection certificate 3.1 to EN 10204 of pressure test								C5
Certificate of compliance with the order EN 10204–2.1 of instrument design								C6
With device data log								CG
PMI test of wetted parts								CT

		XX	XX	XX	XX
Approvals					
Metrologic Pattern for Russia	(NOT APPLICABLE WITH ANY HAZARDOUS AREA CERTIFICATION)	Y1			
Metrologic Pattern for Kazakhstan	(NOT APPLICABLE WITH ANY HAZARDOUS AREA CERTIFICATION)	Y2			
Metrologic Pattern for Ukraine	(NOT APPLICABLE WITH ANY HAZARDOUS AREA CERTIFICATION)	Y3			
Metrologic Pattern for Belarus	(NOT APPLICABLE WITH ANY HAZARDOUS AREA CERTIFICATION)	Y4			
DNV GL approval		YA			
Conformity to NAMUR NE 021 (2004)	(NOT APPLICABLE WITH SURGE PROTECTOR CODE “S2”) (Note: 3, 9)	YE			
Material Traceability					
Inspection certificate EN 10204–3.1 of process wetted parts (not for gaskets)	(Note: 4)		H3		
Test report EN 10204–2.2 of pressure bearing and process wetted parts (not for gaskets)			H4		
Plug connector					
Fieldbus 7/8 in (Recommended for FOUNDATION Fieldbus, supplied loose, without mating plug)				U1	
Fieldbus M12 x 1 (Recommended for PROFIBUS PA, supplied loose, without mating plug)				U2	
Harting Han 8D (8U), straight entry				U3	
Harting Han 8D (8U), angle entry				U4	
Harting Han 7D				U5	
Harting HAN 8D (8U), for four-wire accessory unit				U6	
Harting HAN 7D, for four-wire accessory unit				U7	
With cable gland M20 x 1.5 (Plastic, black, supplied loose)				U8	
Housing accessories					
Manifold mounting and pressure test (NOT AVAILABLE WITH OXYGEN SERVICE CLEANING - PREPARATION PROCEDURE CODE P1)					A1

Note 1: Not available with measuring range limits Code C, F
Note 2: Select connector with additional order code
Note 3: Not available with Output code 2, 3
Note 4: Minor parts with factory certificate according to EN 10204
Note 5: Not available with housing material / electrical connection code G, W, Z
Note 6: Not available with housing material / electrical connection code E, K
Note 7: Not available with housing material / electrical connection code E, G, K, W, Z
Note 8: Not available with housing material / electrical connection code E, G, J, K, W, Z
Note 9: Not available with Hazardous area certification code E4, E6, EA, EB, EC, EN, EY, EZ, ES, EP, EQ, W1, W2, W3, W4, WF, WG

Standard delivery scope (changes possible with additional ordering code)

- For standard applications (without explosion protection)
- No display, no mounting bracket, no surge protection
- Multilanguage short-form operating instruction and English labeling
- Configuration with kPa and °C units
- No test, inspection, or material certificates

Unless otherwise specified prior to manufacture, the customer shall be responsible for selecting suitable wetted parts and an appropriate filling fluid in order to ensure compatibility with the measuring fluid.
Compliance with the NACE regulation is based on recommendations MR0175 / ISO 15156. Additionally, stainless steel AISI 316, AISI 316L and Hastelloy C-276 automatically meet the criteria of MR0103, provided that they also meet the criteria of MR0175.

Trademarks

® Buna-N is a registered trademark of DuPont Dow Elastomers.
® FOUNDATION Fieldbus is a registered trademark of FieldComm Group, Austin, Texas, USA
® HART is a registered trademark of FieldComm Group, Austin, Texas, USA
® Hastelloy is a registered trademark of Haynes International, Inc.
® PROFIBUS and PROFIBUS PA are registered trademarks of PROFIBUS & PROFINET International (PI)
® Monel is a registered trademark of Special Metals Corporation
™ FieldComm Group is a trademark of FieldComm Group, Austin, Texas, USA
™ Galden is a Montefluos trademark
™ Kynar is an Elf Atochem North America Inc. trademark
™ Viton is a DuPont de Nemours trademark

Castel Maggiore (BO) 40013
Via Lirone 60/i

e-mail: info@eurotecsrl.com
Tel: +39 051/6321595
Website: www.eurotecsrl.com

C.F.: 04103780377
P.I.: 01596581205

—

ABB Ltd.
Measurement & Analytics
Howard Road St. Neots
Cambridgeshire PE19 8EU
UK
Tel: +44 (0)1480 475321
Fax: +44 (0)1480 217948

ABB S.p.A.
Measurement & Analytics
Via Luigi Vaccani 4
22016 Tremezzina Loc. Ossuccio (CO)
Italy
Tel: +39 0344 58111

ABB Inc.
Measurement & Analytics
125 E. County Line Road
Warminster PA 18974
USA
Tel: +1 215 674 6000
Fax: +1 215 674 7183

abb.com/measurement

We reserve the right to make technical changes or modify the contents of this document without prior notice. With regard to purchase orders, the agreed particulars shall prevail.
ABB does not accept any responsibility whatsoever for potential errors or possible lack of information in this document.

We reserve all rights in this document and in the subject matter and illustrations contained therein.
Any reproduction, disclosure to third parties or utilization of its contents – in whole or in parts – is forbidden without prior written consent of ABB.

© Copyright 2019 ABB
All rights reserved

3KXP200011R1001

DS/266GST/AST-EN Rev. F 04.2019