ABB MEASUREMENT & ANALYTICS | DATA SHEET

266DSH

Differential pressure transmitters

Measurement made easy
Engineered solutions for all applications

Base accuracy
- from 0.06 % of calibrated span (optional 0.04 %)

Reliable sensing system coupled with very latest digital technologies
- provides large turn down ratio up to 100:1

Comprehensive sensor choice
- optimize in-use total performance and stability

10–year stability
- 0.15 % of URL

Flexible configuration facilities
- provided locally via local LCD keypad

New TTG (Through-The-Glass) keypad technology
- allows quick and easy local configuration without opening the cover, even in explosion proof environments

IEC 61508 certification
- version for SIL2 (1oo1) and SIL3 (1oo2) applications

PED compliance
- Category III for PS > 20 MPa, 200 bar
- Sound Engineering Practice (SEP) for PS ≤ 20 MPa, 200 bar

WirelessHART version
- the battery powered solution compliant to IEC 62591

Best-in-class battery life
- up to 10 years @ 32 s update time
- in-field replaceable

Product in compliance with Directive 2011/65/UE (RoHS II)

In-built advanced diagnostics

Specification – functional

Range and span limits

Sensor code	Upper range limit (URL)	Lower range limit (LRL)	Minimum measuring span
A	1 kPa 10 mbar 4 inH2O	–1 kPa –10 mbar –4 inH2O	0.05 kPa 0.5 mbar 0.2 inH2O
B	4 kPa 40 mbar 16 inH2O	–4 kPa –40 mbar –16 inH2O	0.2 kPa 2 mbar 0.8 inH2O
E	16 kPa 160 mbar 64 inH2O	–16 kPa –160 mbar –64 inH2O	0.54 kPa 5.4 mbar 2.16 inH2O
F	40 kPa 400 mbar 160 inH2O	–40 kPa –400 mbar –160 inH2O	0.4 kPa 4 mbar 1.6 inH2O
H	160 kPa 1600 mbar 642 inH2O	–160 kPa –1600 mbar –642 inH2O	1.6 kPa 16 mbar 6.4 inH2O
M	600 kPa 6 bar 87 psi	–600 kPa –6 bar –87 psi	6 kPa 0.06 bar 0.87 psi
P	2400 kPa 24 bar 348 psi	–2400 kPa –24 bar –348 psi	24 kPa 0.24 bar 3.5 psi
Q	8000 kPa 80 bar 1160 psi	–8000 kPa –80 bar –1160 psi	80 kPa 0.8 bar 11.6 psi
S	16000 kPa 160 bar 2320 psi	–16000 kPa –160 bar –2320 psi	160 kPa 1.6 bar 23.2 psi

Span limit

Maximum span = URL
(can be further adjusted up to ± URL (TD = 0.5) for differential models, within the range limits)
IT IS RECOMMENDED TO SELECT THE TRANSMITTER SENSOR CODE PROVIDING THE TURNDOWN VALUE AS LOWEST AS POSSIBLE TO OPTIMIZE PERFORMANCE CHARACTERISTICS.

Zero suppression and elevation

Zero and span can be adjusted to any value within the range limits detailed in the table as long as:
– calibrated span ≥ minimum span

Damping (feature not available for WirelessHART version)

Selectable time constant : between 0 and 60 s
This is in addition to sensor response time.

Turn on time

Operation within specification in less than 10 s with minimum damping.

Insulation resistance

> 100 MΩ at 500 V DC (terminals to earth)

Specification – operative limits

Pressure limits

Overpressure limits

The differential pressure transmitters, models 266DSH, work without damage within the following pressure limits:

Sensors	Fill fluid	Overpressure limits
Sensor F to S	Silicone oil	0.07 kPa abs, 0.7 mbar abs, 0.5 mmHg and 21 MPa, 210 bar, 3045 psi *, **
Sensor F to Q 266DSH High Static	Silicone oil	0.07 kPa abs, 0.7 mbar abs, 0.5 mmHg and 42 MPa, 420 bar, 6090 psi
Sensor E	Silicone oil	0.07 kPa abs, 0.7 mbar abs, 0.5 mmHg and 16 MPa, 160 bar, 2320 psi *
Sensor B	Silicone oil	0.07 kPa abs, 0.7 mbar abs, 0.5 mmHg and 7 MPa, 70 bar, 1015 psi *
Sensor A	Silicone oil	0.07 kPa abs, 0.7 mbar abs, 0.5 mmHg and 2 MPa, 20 bar, 290 psi *
Sensor F to S	Inert (Galden)	0.135 kPa abs, 1.35 mbar abs, 1 mmHg and 21 MPa, 210 bar, 3045 psi *, **
Sensor E	Inert (Galden)	0.135 kPa abs, 1.35 mbar abs, 1 mmHg and 16 MPa, 160 bar, 2320 psi *

* 1 MPa, 10 bar, 145 psi for Kynar-PVDF
** 16 MPa, 160 bar, 2320 psi for AISI 316 ss NACE “exposed bolting“

For flange mounted version

Flange	Fill fluid	Overpressure limits
ASME B16.5 Class 150	Silicone oil	0.07 kPa abs, 0.7 mbar abs, 0.5 mmHg and 230 psi
ASME B16.5 Class 300	Silicone oil	0.07 kPa abs, 0.7 mbar abs, 0.5 mmHg and 600 psi
EN 1092-1 PN 16	Silicone oil	0.07 kPa abs, 0.7 mbar abs, 0.5 mmHg and 13.5 bar
EN 1092-1 PN 40	Silicone oil	0.07 kPa abs, 0.7 mbar abs, 0.5 mmHg and 33.8 bar
ASME B16.5 Class 150	Inert (Galden)	0.135 kPa abs, 1.35 mbar abs, 1 mmHg and 230 psi
ASME B16.5 Class 300	Inert (Galden)	0.135 kPa abs, 1.35 mbar abs, 1 mmHg and 600 psi
EN 1092-1 PN 16	Inert (Galden)	0.135 kPa abs, 1.35 mbar abs, 1 mmHg and 13.5 bar
EN 1092-1 PN 40	Inert (Galden)	0.135 kPa abs, 1.35 mbar abs, 1 mmHg and 33.8 bar

Static pressure limits

The differential pressure transmitters, models 266DSH work within specifications between the following limits:

Sensors	Static pressure limits
Sensor F to S	1.3 kPa abs, 13 mbar abs, 0.2 psia and 21 MPa, 210 bar, 3045 psi *, **
Sensor F to Q 266DSH High Static	1.3 kPa abs, 13 mbar abs, 0.2 psia and 42 MPa, 420 bar, 6090 psi
Sensor E	1.3 kPa abs, 13 mbar abs, 0.2 psia and 16 MPa, 160 bar, 2320 psi *
Sensor B	1.3 kPa abs, 13 mbar abs, 0.2 psia and 7 MPa, 70 bar, 1015 psi *
Sensor A	1.3 kPa abs, 13 mbar abs, 0.2 psia and 2 MPa, 20 bar, 290 psi *

* 1 MPa, 10 bar, 145 psi for Kynar-PVDF
** 16 MPa, 160 bar, 2320 psi for AISI 316 ss NACE “exposed bolting“

Flange	Static pressure limits
ASME B16.5 Class 150	1.3 kPa abs, 13 mbar abs, 0.2 psia and 230 psi
ASME B16.5 Class 300	1.3 kPa abs, 13 mbar abs, 0.2 psia and 600 psi
EN 1092-1 PN 16	1.3 kPa abs, 13 mbar abs, 0.2 psia and 13.5 bar
EN 1092-1 PN 40	1.3 kPa abs, 13 mbar abs, 0.2 psia and 33.8 bar

The pressure limit decreases with increasing temperature above 100°F (38°C), according to ASME B16.5 standards or above 50°C according to EN 1092-1 standards.

Proof pressure

The transmitterwith threaded process connection can be exposed without leaking to line pressure of up to

- 48 MPa, 480 bar, 6960 psi for standard static version
- 77 MPa, 770 bar, 11165 psi for high static version.
- up to two times the flange rating for the flange mounted version.

Meet ANSI/ISA-S 82.03 hydrostatic test requirements.

Temperature limits °C (°F)

Ambient

is the operating temperature

Models 266DSH	Ambient temperature limits
Silicone oil for sensor F to S	–40 and 85 °C (–40 and 185 °F)
Silicone oil for sensor A to E	–25 and 85 °C (–13 and 185 °F)
Inert (Galden) for sensor F to S	–20 and 85 °C (–4 and 185 °F)
Inert (Galden) for sensor E	–10 and 85 °C (14 and 185 °F)

Models 266DSH	Ambient temperature limits
LCD integral display	–40 and 85 °C (–40 and 185 °F)

LCD display may not be clearly readable below –20 °C (–4 °F) or above +70 °C (+158 °F)

IMPORTANT

For Hazardous Atmosphere applications see the temperature range specified on the certificate/approval relevant to the aimed type of protection

Process

Models 266DSH	Process temperature limits
Silicone oil for sensor F to S	–40 and 121 °C (–40 and 250 °F) *
Silicone oil for sensor A to E	–25 and 121 °C (–13 and 250 °F) *
Inert (Galden) for sensor F to S	–20 and 100 °C (–4 and 212 °F) **
Inert (Galden) for sensor E	–10 and 100 °C (14 and 212 °F) **

* 100 °C (212 °F) for application below atmospheric pressure
** 65 °C (150 °F) for application below atmospheric pressure

Models 266DSH	Process temperature limits
Viton gasket	–20 and 121 °C (–4 and 250 °F)

Storage

Models 266DSH	Storage temperature limits
Storage limits	–50 and 85 °C (–58 and 185 °F)
LCD integral display	–40 and 85 °C (–40 and 185 °F)

Environmental limits

Electromagnetic compatibility (EMC)

Comply with 2014/30/UE to standards EN 61326-1:2013.
For IEC 61508 SIL certified transmitter to EN 61326-3-1:2008.
For transmitter with option “YE” to NAMUR NE 021 (2004).
Surge immunity level (with surge protector): 4 kV (according to IEC 61000-4–5 EN 61000–4–5)

Pressure equipment directive (PED)

Comply with 2014/68/UE to standards ANSI/ISA 61010-1:2012
Category III Module H for PS ≥ than 20 MPa, 200 bar
Sound Engineering Practice (SEP) for PS < 20 MPa, 200 bar

Humidity

Relative humidity: up to 100 %
Condensing, icing: admissible

Vibration resistance

Accelerations up to 2 g at frequency up to 1000 Hz (according to IEC 60068–2–6)

Shock resistance

Acceleration: 50 g
Duration: 11 ms
(according to IEC 60068–2–27)

Wet and dust-laden atmospheres

The transmitter is dust and sand tight and protected against immersion effects as defined by IEC 60529 (2001) to IP 67 (IP 68 on request) or by NEMA Type 4X.
IP65 with Harting Han connector.
Aluminium and AISI housings as barrel version also comply to IP 66 as defined by IEC 60529 (2001).
IP66W/IP67W/IP68W as standard for Inmetro certification.

...Specification – operative limits

Hazardous atmospheres

(FOR ALL VERSIONS EXCEPT WirelessHART)

With or without integral display

INTRINSIC SAFETY Ex ia:

- ATEX Europe (code E1) approval
  II 1 G Ex ia IIC T6...T4 Ga, II 1/2 G Ex ia IIC T6...T4 Ga/Gb, II 1 D Ex ia IIIC T85 °C Da, II 1/2 D Ex ia IIIC T85 °C Da; IP66, IP67.
- IECEx (code E8) approval
  Ex ia IIC T6...T4 Ga/Gb, Ex ia IIIC T85 °C Da; IP66, IP67.
- NEPSI China (code EY)
  Ex ia IIC T4/T5/T6 Ga, Ex ia IIC T4/T5/T6 Ga/Gb, Ex iaD 20 T85/T100/T135, Ex iaD 20/21 T85/T100/T135.

EXPLOSION PROOF:

- ATEX Europe (code E2) approval
  II 1/2 G Ex db IIC T6 Ga/Gb Ta=–50 °C to +75 °C, II 1/2 D Ex tb IIIC T85 °C Db Ta = –50 °C to +75 °C; IP66, IP67.
- IECEx (code E9) approval
  Ex db IIC T6 Ga/Gb Ta=–50 °C to +75 °C, Ex tb IIIC T85 °C Db Ta = –50 °C to +75 °C; IP66, IP67.
- NEPSI China (code EZ)
  Ex d IIC T6 Gb, Ex tD A21 IP67 T85 °C.

INTRINSIC SAFETY Ex ic:

- ATEX Europe (code E3) type examination
  II 3 G Ex ic IIC T6...T4 Gc, II 3 D Ex tc IIIC T85 °C Dc; IP66, IP67.
- IECEx (code ER) type examination
  Ex ic IIC T6...T4 Gc, Ex tc IIIC T85 °C Dc; IP66, IP67.
- NEPSI China (code ES) type examination
  Ex ic IIC T4~T6 Gc, Ex nA IIC T4~T6 Gc, Ex tD A22 IP67 T85 °C.

FM Approvals US (code E6) and
FM Approvals Canada (code E4):

- Explosionproof (US): Class I, Division 1, Groups A, B, C, D; T5
- Explosionproof (Canada): Class I, Division 1, Groups B, C, D; T5
- Dust-ignitionproof: Class II, Division 1, Groups E, F, G; Class III, Div. 1; T5
- Flameproof (US): Class I, Zone 1 AEx d IIC T4 Gb
- Flameproof (Canada): Class I, Zone 1 Ex d IIC T4 Gb
- Nonincendive: Class I, Division 2, Groups A, B, C, D T6...T4
- Energy limited (US): Class I, Zone 2 AEx nC IIC T6...T4
- Energy limited (Canada): Class I, Zone 2 Ex nC IIC T6...T4
- Intrinsically safe: Class I, II, III, Division 1, Groups A, B, C, D, E, F, G T6...T4
  Class I, Zone 0 AEx ia IIC T6...T4 (US)
  Class I, Zone 0 Ex ia IIC T6...T4 (Canada)

Type 4X, IP66, IP67 for all above markings.

COMBINED FM Approvals US and Canada

- Intrinsically safe (code EA)

COMBINED ATEX, FM and IECEx Approvals (code EN)
Technical Regulations Customs Union EAC (Russia, Kazakhstan, Belarus), Inmetro (Brazil), Kosha (Korea)

(ONLY FOR WirelessHART VERSION)

With or without integral display

INTRINSIC SAFETY Ex ia:

- ATEX Europe (code E1) approval
  II 1 G Ex ia IIC T4 and II 1/2 G Ex ia IIC T4, IP67.
- IECEx (code E8) approval
  Ex ia IIC T4

FM Approvals US and FM Approvals Canada:

- Intrinsically safe: Class I, Division 1, Groups A, B, C, D; T4
  Class I, Zone 0 AEx ia IIC T4 Gb (US)
  Class I, Zone 0 Ex ia IIC T4 Gb (Canada)

IP67 for all above markings.

IMPORTANT

REFER TO CERTIFICATES FOR AMBIENT TEMPERATURE RANGES RELATED TO THE DIFFERENT TEMPERATURE CLASSES.
HIGH STATIC VERSION IS NOT IN COMPLIANCE WITH ISA 12.27.01 FOR SEALING REQUIREMENTS, SPECIFICALLY FOR FM APPROVAL (Canada).

Electrical Characteristics and Options

Optional indicators

Integrated digital display
(code LS; only with HART standard functionality)

Wide screen LCD, 128 x 64 pixel,
52.5 x 27.2 mm (2.06 x 1.07 in.) dot matrix.
Two keys for zero/span or without keypad.
User selectable application-specific visualizations.
Display may also indicate static pressure, sensor temperature and diagnostic messages.

Integral display with integral keypad
(code L1; not with HART standard functionality)

Wide screen LCD, 128 x 64 pixel,
52.5 x 27.2 mm (2.06 x 1.07 in.) dot matrix.
Multilanguage. Four keys for configuration and management of device.
Easy setup for quick commissioning.
User selectable application-specific visualizations.
Totalized and instantaneous flow indication.
Display may also indicate static pressure, sensor temperature and diagnostic messages and provides configuration facilities.

Integral display with Through-The-Glass (TTG) activated keypad (code L5; not with HART standard functionality)

As above integral display but equipped with the innovative TTG keypad allowing the activation of the configuration and management menus of the device without the need of removing the transmitter housing cover. TTG keypad is protected against accidental activations.

Optional surge protection

Up to 4kV

- voltage 1.2 µs rise time / 50 µs delay time to half value
- current 8 µs rise time / 20 µs delay time to half value

Process diagnostics (PILD)

Plugged impulse line detection (PILD) generates a warning via communication (HART, PA, FF). The device can be configured to drive the output to “Alarm current” or set a status “BAD”.

HART® digital communication and 4 to 20 mA output – Standard and Advanced functionality

Device type: $1a06_{hex}$ (listed with HCF)

Power supply

The transmitter operates from 10.5 to 42 V DC with no load and is protected against reverse polarity connection (additional load allows operations over 42 V DC).
For Ex ia and other intrinsically safe approval power supply must not exceed 30 V DC. Minimum operating voltage increases to 12.3 V DC with optional surge protector or to 10.8 V DC with optional conformity to NAMUR NE 21 (2004).

Ripple

20 mV max on a 250 Ω load as per HART specifications.

Load limitations

4 to 20 mA and HART total loop resistance :

$$R\ (k\Omega) = \frac{\text{Supply voltage} - \text{min. operating voltage (V DC)}}{22\ \text{mA}}$$

A minimum of 250 Ω is required for HART communication.

Output signal

Two–wire 4 to 20 mA, user-selectable for linear or square root output, power of $^3/_2$ or $^5/_2$, square root for bidirectional flow, 22 points linearization table (i.e. for horizontal or spherical tank level measurement). HART® communication provides digital process variable superimposed on 4 to 20 mA signal, with protocol based on Bell 202 FSK standard.
HART revision 7 is the default HART output.
HART revision 5 is selectable on request.

Output current limits (to NAMUR NE 43 standard)

Overload condition

- Lower limit: 3.8 mA (configurable from 3.8 to 4 mA)
- Upper limit: 20.5 mA (configurable from 20 to 21 mA)

Alarm current

- Lower limit: 3.6 mA (configurable from 3.6 to 4 mA)
- Upper limit: 21 mA (configurable from 20 to 23 mA, limited to 22 mA for HART Safety; apply for electronics release 7.1.15 or later)

Factory setting: high alarm current.

...Specification – electrical characteristics and options

IEC 62591 WirelessHART® output

Device type: 1a06hex (listed with HCF)
Network ID: ABBhex (2747 decimal)
Join keys: 57495245_{hex} (1464422981) $4c455353_{hex}$ (1279611731) $4649454C_{hex}$ (1179206988) $444b4559_{hex}$ (1145783641).

Power Supply

1x D-cell size lithium-thionyl chloride battery.
Battery life: 10 years at 32 sec. update time, 8 years at 16 sec. update time or 5 years at 8 sec. update time.
(at reference conditions of 25 ± 2 °C ambient temperature, data routed from 3 additional devices, LCD off).

THE BATTERY CAN BE REPLACED IN FIELD, ALSO IN HAZARDOUS CLASSIFIED AREA.

Output signal

IEC 62591 WirelessHART Version 7.5 (IEEE 802.15.4-2006);
Frequency band: 2.4 GHz DSSS
Update rate: user selectable from 1 sec. to 60 min.

Integrated adjustable omnidirectional antenna

– Output radio frequency: maximum 10 mW (10 dBm) EIRP
– Range: up to 300 m. (328 yds.)
Minimum distance between antenna and person is 0.2 m. (8 in.)

Telecommunications directive

Every wireless measuring device must be certified in accordance with the telecommunications directive, in this case the frequency range. This certification is country-specific.

European directives

Radio Equipment & Telecommunications Terminal Equipment Directive 2014/53/UE to standards EN 60950-1:2013,
EN 62311:2008, EN 301 489-1 V1.9.2, EN 301 489-17 V2.2.1, EN 300 328 v1.8.1.
In Europe, use of the 2400 - 2483.5 MHz frequency band is not harmonized. Country-specific regulations must be observed.

Restrictions for Norway

Operation not permitted within a radius of 20 km around Ny-Alesund in Svalbard. For more information, see www.npt.no Norway Posts and Telecommunications site

Extra-european radio frequency licences

USA to FCC Part 15.247:2009;
Canada to IC RSS-210 and ICES-003;
Argentina; United Arab Emirates (UAE); India; Mexico.

PROFIBUS® PA output

Device type

Pressure transmitter compliant to Profiles 3.0.1
Identification number: 3450 (hex)

Power supply

The transmitter operates from 9 to 32 V DC , polarity independent, with or without surge protector.
For Ex ia approval power supply must not exceed 17.5 V DC.
Intrinsic safety installation according to FISCO model.

Current consumption

operating (quiescent): 15 mA
fault current limiting: 20 mA max.

Output signal

Physical layer in compliance to IEC 1158–2/EN 61158–2 with transmission to Manchester II modulation, at 31.25 kbit/s.

Output interface

PROFIBUS PA communication according to Profibus DP50170 Part 2/DIN 19245 part 1–3.

Output update time

25 ms

Data blocks

3 analog input, 1 physical.

Additional blocks

1 Pressure with calibration transducer block
1 Advanced Diagnostics transducer block including Plugged Input Line Detection
1 Local Display transducer block

Transmitter failure mode

On gross transmitter failure condition, detected by self-diagnostics, the output signal can be driven to defined conditions, selectable by the user as safe, last valid or calculated value.
If electronic failure or short circuit occur the transmitter consumption is electronically limited at a defined value (20 mA approx), for safety of the network.

FOUNDATION FieldbusTM output

Device type

LINK MASTER DEVICE
Link Active Scheduler (LAS) capability implemented.
Manufacturer code: 000320_{hex}
Device type code: 0007_{hex}

Power supply

The transmitter operates from 9 to 32 V DC, polarity independent, with or without surge protector.
For Ex ia approval power supply must not exceed 24 V DC (FF–816 certification) or 17.5 V DC (FISCO certification).

Current consumption

operating (quiescent): 15 mA
fault current limiting: 20 mA max.

Output signal

Physical layer in compliance to IEC 61158–2/EN 61158–2.
Transmission to Manchester II modulation, at 31.25 kbit/s.

Function blocks/execution period

3 enhanced Analog Input blocks/25 ms max (each)
1 enhanced PID block/40 ms max.
1 standard ARitmetic block/25 ms
1 standard Input Selector block/25 ms
1 standard Control Selector block/25 ms
1 standard Signal Characterization block/25 ms
1 standard Integrator/Totalizer block/25 ms

Additional blocks

1 enhanced Resource block,
1 custom Pressure with calibration transducer block
1 custom Advanced Diagnostics transducer block
including Plugged Input Line Detection
1 custom Local Display transducer block

Number of link objects

35

Number of VCRs

35

Output interface

FOUNDATION fieldbus digital communication protocol to standard H1, compliant to specification V. 1.7.

Transmitter failure mode

The output signal is “frozen” to the last valid value on gross transmitter failure condition, detected by self-diagnostics which also indicate a BAD conditions. If electronic failure or short circuit occur the transmitter consumption is electronically limited at a defined value (20 mA approx), for safety of the network.

Specification – performance

Stated at reference condition to IEC 60770 ambient temperature of 20 °C (68 °F), relative humidity of 65 %, atmospheric pressure of 1013 hPa (1013 mbar), mounting position with vertical diaphragm and zero based range for transmitter with isolating diaphragms in AISI 316 L ss or Hastelloy and silicone oil fill and HART digital trim values equal to 4 mA and to 20 mA span end points, in linear mode.
Unless otherwise specified, errors are quoted as % of span.
Some performance referring to the Upper Range Limit are affected by the actual turndown (TD) as ratio between Upper Range Limit (URL) and calibrated span.
IT IS RECOMMENDED TO SELECT THE TRANSMITTER SENSOR CODE PROVIDING THE TURNDOWN VALUE AS LOWEST AS POSSIBLE TO OPTIMIZE PERFORMANCE CHARACTERISTICS.

Dynamic performance (according to IEC 61298–1 definition)

Sensors	Total response time
Sensor F to S	≤ 100 ms *

Total response time for sensor E ≤ 130 ms, for sensor B ≤ 310 ms *

* Availability subject to special request for sensors B to H and not applicable for explosionproof and flameproof.

Total response time includes dead time of 30 ms (for all sensors) with time constant @ 63.2 % of total step change.
See “Update Rate” for WirelessHART version.

Accuracy rating

% of calibrated span, including combined effects of terminal based linearity, hysteresis and repeatability.
For fieldbus versions SPAN refer to analog input function block outscale range

Model	Sensor	for TD	
266DSH standard static and for gauge application	F to P	from 1:1 to 10:1	± 0.06 %
	F to P	from 10:1 to 100:1	± (0.006 x TD) %
	E, Q, S	from 1:1 to 10:1	± 0.075 %
	Q and S	from 10:1 to 100:1	± (0.0075 x TD) %
	E	from 10:1 to 30:1	± (0.0075 x TD) %
	B	from 1:1 to 10:1	± 0.10 %
	B	from 10:1 to 20:1	± (0.01 x TD) %
	A	from 1:1 to 4:1	± 0.10 %
	A	from 4:1 to 20:1	± (0.025 x TD) %
266DSH (option D2)	F to Q	from 1:1 to 5:1	± 0.04 %
	F to P	from 5:1 to 100:1	± (0.0105 + 0.0059 x TD) %
	Q	from 5:1 to 100:1	± (0.003 + 0.0074 x TD) %
266DSH high static	F to Q	from 1:1 to 10:1	± 0.075 %
	F to Q	from 10:1 to 100:1	± (0.0075 x TD) %

Ambient temperature

per 20K change between the limits of –40 °C to +85 °C (per 36 °F change between the limits of –40 to +185 °F):

Model	Sensor	for TD up to	
266DSH	F to Q	10:1	± (0.03 % URL + 0.045 % span)
	E and S	10:1	± (0.04 % URL + 0.065 % span)
	B	10:1	± (0.06 % URL + 0.10 % span)
	A	4:1	± (0.10 % URL + 0.10 % span)

for an ambient temperature change from –10 °C to +60 °C (+14 to +140 °F):

Model	Sensor	for TD up to	
266DSH	F to Q	10:1	± (0.055 % URL + 0.08 % span)
	E and S	10:1	± (0.075 % URL + 0.11 % span)
	B	10:1	± (0.11 % URL + 0.18 % span)
	A	4:1	± (0.18 % URL + 0.18 % span)

per 10K change between the limits of –40 °C to –10 °C or +60° to +85 °C (per 18 °F change between the limits of –40 to +14 °F or +140° to +185 °F):

Model	Sensor	for TD up to	
266DSH	F to Q	10:1	± (0.03 % URL + 0.04 % span)
	E and S	10:1	± (0.04 % URL + 0.055 % span)
	B	10:1	± (0.055 % URL + 0.09 % span)
	A	4:1	± (0.09 % URL + 0.09 % span)

Static pressure

(zero errors can be calibrated out at line pressure)
per 0.5 MPa, 5 bar or 72.5 psi (sensor A)
per 2 MPa, 20 bar or 290 psi (sensor B)
per 3.5 MPa, 35 bar or 500 psi (sensor E)
per 7 MPa, 70 bar or 1015 psi (sensor F to S)
Model 266DSH standard static

- zero error: ±0.05 % of URL for sensor F to S
  ±0.08 % of URL for sensor A, B and E
- span error: ±0.08 % of reading.

Model 266DSH high static

- zero error: ±0.08 % of URL for sensor F to Q
- span error: ±0.20 % of reading.

Model 266DSH flange mounted
per 2 MPa, 20 bar or 290 psi

- zero error: ±0.05 % of URL for sensor F to P
  ±0.08 % of URL for sensor E

span error: ±0.08 % of reading.

Supply voltage

Within voltage/load specified limits the total effect is less than 0.005 % of URL per volt.

Load

Within load/voltage specified limits the total effect is negligible.

Electromagnetic field

Meets all the requirements of EN 61326 for surge immunity level (of NAMUR NE 21 on request).

Common mode interference

No effect from 100Vrms @ 50Hz, or 50 V DC

Mounting position

No effect for rotation on diaphragm plane. A tilt up to 90° from vertical causes a zero shifts up to 0.5 kPa, 5 mbar or 2 inH2O, which can be corrected with zero adjustment. No span effect.

Stability

±0.15 % of URL over a ten years period
(±0.25 % of URL over a ten years period for sensor A or B)
0.15 % of URL over a five years period for 266DSH high static.

Maximum total performance

For temperature change of 28 °C (50 °F), static pressure change of 5,1 MPa, 51 bar, 740 psi, for model 266DSH with accuracy option code D2 (± 0.04 %)

Sensor	Span	Maximum total performance
F	35 kPa, 350 mbar, 140 inH2O	≤± 0.125 % of calibrated span
H	150 kPa, 1,5 bar, 600 inH2O	
M	550 kPa, 5,5 bar, 80 psi	

$$E_{Mperf} = \sqrt{(E_{\Delta Tz} + E_{\Delta Ts})^2 + E_{\Delta Ps}{}^2 + E_{lin}{}^2}$$

E_{Mperf} = Maximum total performance
$E_{\Delta Tz}$ = Effect of the ambient temperature on zero
$E_{\Delta Ts}$ = Effect of the ambient temperature on span
$E_{\Delta Ps}$ = Effect of the static pressure on span
E_{lin} = Accuracy rating (for terminal-based linearity 0.04 %)

Total performance

similar to DIN 16086
Temperature change in the range from –10 to 60 °C (14 to 140 °F), static pressure change (266DSH) 10 MPa, 100 bar, 1450 psi

Model	Sensor	TD	Total performance
266DSH std. static, D2 option	F to Q	1:1	≤± 0.16 % of calibrated span

$$E_{perf} = \sqrt{(E_{\Delta Tz} + E_{\Delta Ts})^2 + E_{\Delta Ps}{}^2 + E_{lin}{}^2}$$

E_{perf} = Total Performance
$E_{\Delta Tz}$ = Effect of the ambient temperature on zero
$E_{\Delta Ts}$ = Effect of the ambient temperature on span
$E_{\Delta Ps}$ = Effect of the static pressure on span (266DSH only)
E_{lin} = Accuracy rating (for terminal-based linearity 0.04 % or 0.075% as per model/sensor accuracy)

Maximum total performance and Total performance includes the measuring errors of

- non-linearity including hysteresis and non-reproducibility,
- thermal change of the ambient temperature as regards the zero signal and the calibrated span,
- effect of static pressure change on the calibrated span, with transmitter re-zeroed at line pressure.

Specification – physical

(Refer to ordering information sheets for variant availability related to specific model or versions code)

Materials

Process isolating diaphragms (*)

AISI 316 L ss; AISI 316 L ss gold plated; Monel 400®; Tantalum; Hastelloy® C-276; Hastelloy® C-276 on AISI 316L ss gasket seat.

Process flanges, adapters, plugs and drain/vent valves (*)

AISI 316 L ss [(1)]; Hastelloy® C-276 [(2)]; Monel 400® [(3)]; Kynar® (PVDF insert in AISI 316 ss flange).
AISI 316 L ss with flushing connections for high side of flange mounted version.

Sensor fill fluid

Silicone oil; Inert fill (Galden®).

Mounting bracket (**)

Zinc plated carbon steel with chrome passivation; AISI 316 ss; AISI 316 L ss.

Gaskets (*)

Viton®; PTFE.

Sensor housing

AISI 316 L ss.

Bolts and nuts

AISI 316 ss bolts Class A4–80 and nuts Class A4–70 per ISO 3506;
AISI 316 ss bolts and nuts Class A4–50 per ISO 3506, in compliance with NACE MR0175 Class II (std. static only).
Plated alloy steel bolts per ASTM-A-193-77a grade B7M and nuts per ASTM A194/A 194 M-90 grade 2HM, in compliance with NACE MR0175 Class II.
Stainless steel per ASTM-A-453 grade 660D, in compliance with NACE MR0175 Class II (high static only).

Electronic housing and covers

Aluminium alloy (copper content ≤ 0.3 %) with baked epoxy finish (colour RAL9002); AISI 316 L ss.

Covers O-ring

Buna N.

Local adjustments (zero, span and write protect)

For Standard HART version:

- Internal for zero and span (on connection board)
- External non-intrusive for zero, span and write protect in glass filled polyphenylene oxyde, removable (code R1).

For all other versions:

- External non-intrusive for zero, span and write protect in glass filled polyphenylene oxyde, removable.

Plates

Transmitter nameplate: AISI 316 ss screwed to the electronics housing.
Certification plate and optional tag/calibration plate : self-adhesive attached to the electronics housing or AISI 316 ss fastened to the electronics housing with rivets or screws.
Optional wired-on customer data plate: AISI 316 ss.
Laser printing on metal or thermal printing on self-adhesive.
For AISI 316 L ss housing it is mandatory to select option I2 or I3 for plates in AISI 316 ss.

Calibration

Standard: at maximum span, zero based range, ambient temperature and pressure;
Optional: at specified range and ambient conditions.
Device is delivered with a standard 4-point calibration record

(*) Wetted parts of the transmitter.
(**) U-bolt material: high-strength alloy steel or AISI 316 L ss; bolts/nuts material: high-strength alloy steel or AISI 316 ss.
(1) Supplied as AISI 316 L or as ASTM A351 Grade CF-3M
(2) Supplied as Hastelloy C-276 or as ASTM A494 alloy CW-12MW
(3) Supplied as Monel 400 or as ASTM A494 Grade M-35-1

Optional extras

Mounting brackets (code Bx)

For vertical and horizontal 60mm. (2in) pipes or wall mounting. (EXCEPT U-BOLT ASSEMBLY WHICH IS NOT SUPPLIED FOR WALL MOUNTING, PARTS ARE THE SAME FOR PIPE AND WALL BRACKET OPTIONS, AS PER RELEVANT MATERIALS).

Display (code Lx)

4-position (at 90°) user orientable, except "LS".

Optional plates (code Ix)

Code I1: AISI 316 ss wired-on plate with laser printed customized data (4 lines of 32 characters with 4 mm/0.16 in. height).
Code I2: AISI 316 ss plate with laser printed tag (up to 32 characters - long) and calibration details (up to 32 characters: lower and upper range values and engineering unit) fixed onto transmitter housing.
Code I3: complete set of AISI 316 ss plates (see I1 and I2).

Surge protection (code S2)

Cleaning procedure for oxygen service (code P1)

Test Certificates (test, design, calibration, material traceability) (codes Cx and Hx)

Tag and manual language (codes Tx and Mx)

Manifold mounting (code A1)

Factory mounting and pressure test of ABB M26 manifolds.

Process connections

on flanges: 1/4 in. – 18 NPT on process axis
on adapters: 1/2 in. – 14 NPT on process axis
centre distance (266DSH): 54 mm. (2.13 in.) on flange; 51, 54 or 57 mm. (2.01, 2.13 or 2.24 in.) as per adapters fittings
fixing threads: 7/16 in. – 20 UNF at 41.3 mm centre distance
High pressure side of flange mounted version (*):
2 in. or 3 in., ASME Class 150 or Class 300 RF;
DN 50 or DN 80, PN 16 or PN 40 to EN 1092-1 Type B1

(*) Bolts and nuts, gasket and mating flange supplied by customer.

Electrical connections

Two 1/2 in. – 14 NPT or M20x1.5 threaded conduit entries, direct on housing. Only M20x1.5 for WirelessHART with one port used for antenna.
One certified stainless steel plug (supplied loose with thread according to housing entries) available as option.

Terminal block

HART version: three terminals for signal/external meter wiring up to 2.5 mm^2 (14 AWG), also connection points for test and communication purposes.
WirelessHART version: connection points for test and communication purposes; additional fast connection for external harvesting unit.
Fieldbus versions: two terminals for signal wiring (bus connection) up to 2.5 mm^2 (14 AWG)

Grounding

Internal and external 6 mm^2 (10 AWG) ground termination points are provided.

Mounting position

Transmitter can be mounted in any position.
Electronics housing may be rotated to any position. A positive stop prevents over travel.

Mass (without options)

4 kg approx (8.8 lb) for standard static and gauge versions;
4.35 kg approx (9.6 lb) for high static version;
7 to 11 kg approx (16 to 24 lb) for flange mounted version;
add 1.5 kg (3.3 lb) for AISI housing.
Add 650 g (1.5 lb) for packing.

Packing

Carton 27 x 24 x 20 cm approx (11 x 10 x 8 in.);
Carton 35 x 33 x 35 cm approx (14 x 13 x 14 in) for flange mounted version.

Specification – configuration

Transmitter with HART communication and 4 to 20 mA

Standard configuration

Transmitters are factory calibrated to customer's specified range. Calibrated range and tag number are stamped on the tag plate. If a calibration range and tag data are not specified, the transmitter will be supplied with the plate left blank and configured as follows:

Engineering Unit	kPa
4 mA	Zero
20 mA	Upper Range Limit (URL)
Output	Linear
Damping	1 s
Transmitter failure mode	Upscale
Tag	Blank (up to 32 alphanumeric characters - long; only 8 visible on display - short)
Optional LCD display	PV in kPa; output in mA and in percentage on bargraph

Any or all the above configurable parameters, including Lower range–value and Upper range-value which must be the same unit of measure, can be easily changed using the HART hand–held communicator or by a PC running the configuration software with DTM for 266 models. The transmitter database is customized with specified flange type and material, O–ring and drain/vent materials and meter code option.

Custom configuration (option N6)

The following data may be specified in addition to the standard configuration parameters:

Descriptor	16 alphanumeric characters
Message	32 alphanumeric characters
Date	Day, month, year

For HART protocol available engineering units of pressure measure are :
Pa, kPa, MPa
inH2O@4 °C, mmH2O@4 °C, psi
inH2O@68 °F, ftH2O@68 °F, mmH2O@68 °F
inHg, mmHg, Torr
g/cm^2, kg/cm^2, atm
mbar, bar
These and others are available for PROFIBUS and FOUNDATION Fieldbus.

Transmitter with WirelessHART communication

Standard configuration

Transmitters are factory calibrated to customer's specified range. Calibrated range and tag number are stamped on the tag plate. If a calibration range and tag data are not specified, the transmitter will be supplied with the plate left blank and configured as follows:

Engineering Unit	kPa
Output scale 0 %	Lower Range Limit (LRL)
Output scale 100 %	Upper Range Limit (URL)
Output	Linear
Update time	16 s
Tag	Blank (up to 32 alphanumeric characters - long; only 8 visible on display - short)
Optional LCD display	PV in kPa; output in percentage on bargraph

Any or all the above configurable parameters, including Lower range–value and Upper range-value which must be the same unit of measure, can be easily changed using the HART hand–held communicator or by a PC running the configuration software with DTM for 266 models. The transmitter database is customized with specified flange type and material, O–ring and drain/vent materials and meter code option.

Custom configuration (option N6)

The following data may be specified in addition to the standard configuration parameters:

Descriptor	16 alphanumeric characters
Message	32 alphanumeric characters
Date	Day, month, year

Transmitter with PROFIBUS PA communication

Standard configuration

Transmitters are factory calibrated to customer's specified range. Calibrated range and tag number are stamped on the tag plate. If a calibration range and tag data are not specified, the transmitter will be supplied with the plate left blank and configured as follows:

Measure Profile	Pressure
Engineering Unit	kPa
Output scale 0 %	Lower Range Limit (LRL)
Output scale 100 %	Upper Range Limit (URL)
Output	Linear
Hi-Hi Limit	Upper Range Limit (URL)
Hi Limit	Upper Range Limit (URL)
Low Limit	Lower Range Limit (LRL)
Low-Low Limit	Lower Range Limit (LRL)
Limits hysteresis	0.5 % of output scale
PV filter	0 s
Address (set by local key)	126
Tag	PI000 (up to 32 alphanumeric characters; only 8 visible on display)
Optional LCD display	PV in kPa; output in percentage on bargraph

Any or all the above configurable parameters, including the range values which must be the same unit of measure, can be easily changed by a PC running the configuration software with DTM for 266 models.The transmitter database is customized with specified flange type and material, O–ring and drain/vent materials and meter code option.

Custom configuration (option N6)

The following data may be specified in addition to the standard configuration parameters:

Descriptor	32 alphanumeric characters
Message	32 alphanumeric characters
Date	Day, month, year

Transmitter with FOUNDATION Fieldbus communication

Standard configuration

Transmitters are factory calibrated to customer's specified range. Calibrated range and tag number are stamped on the tag plate. If a calibration range and tag data are not specified, the transmitter will be supplied with the plate left blank and the analog input function block FB1 is configured as follows:

Measure Profile	Pressure
Engineering Unit	kPa
Output scale 0 %	Lower Range Limit (LRL)
Output scale 100 %	Upper Range Limit (URL)
Output	Linear
Hi-Hi Limit	Upper Range Limit (URL)
Hi Limit :	Upper Range Limit (URL)
Low Limit	Lower Range Limit (LRL)
Low-Low Limit	Lower Range Limit (LRL)
Limits hysteresis	0.5 % of output scale
PV filter time	0 s
Tag	PI000 (up to 32 alphanumeric characters; only 8 visible on display)
Optional LCD display	PV in kPa; output in percentage on bargraph

The analog input function block FB2 and FB3 are configured respectively for the sensor temperature measured in °C and for the static pressure measured in MPa.

Any or all the above configurable parameters, including the range values, can be changed using any host compliant to FOUNDATION fieldbus. The transmitter database is customized with specified flange type and material, O–ring and drain/vent materials and meter code option.

Custom configuration (option N6)

The following data may be specified in addition to the standard configuration parameters:

Descriptor	32 alphanumeric characters
Message	32 alphanumeric characters
Date	Day, month, year

Dimensions

(not for construction unless certified) – dimensions in mm. (in.)

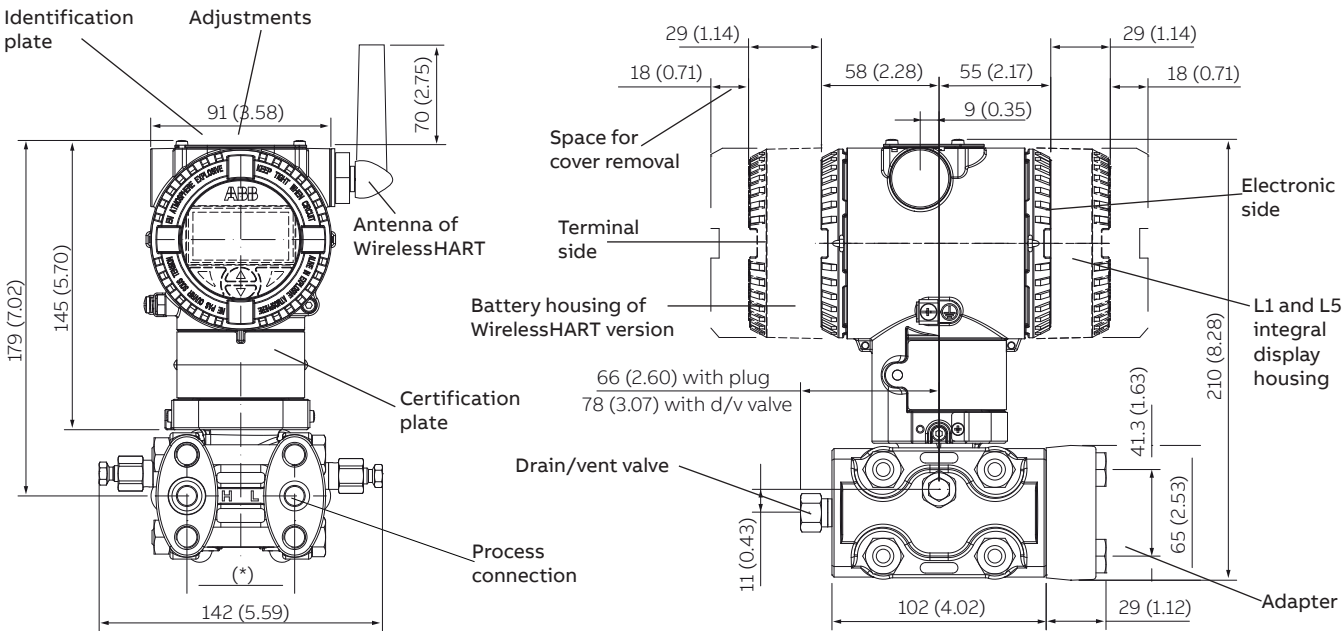

(*) 54 (2.13) mm (in) on 1/4 – 18 NPT process flange; 51 (2.01), 54 (2.13) or 57 (2.24) mm (in) according to 1/2 – 14 NPT adapters fitting 54 (2.13) mm (in) with negative side provided with a removable filter for gauge measurement (version 266DSHxP)

Figure 1 Standard static transmitter with barrel housing - horizontal flanges

NOTE

Process connection, gasket groove and gaskets are in accordance with IEC 61518.
Bolting threads for fixing adapter or other devices (i.e. manifold etc.) on process flange is 7/16 – 20 UNF.

Negative side of gauge measurement version 266DSHxP is provided with a removable filter, granting protection to the atmospheric pressure reference.

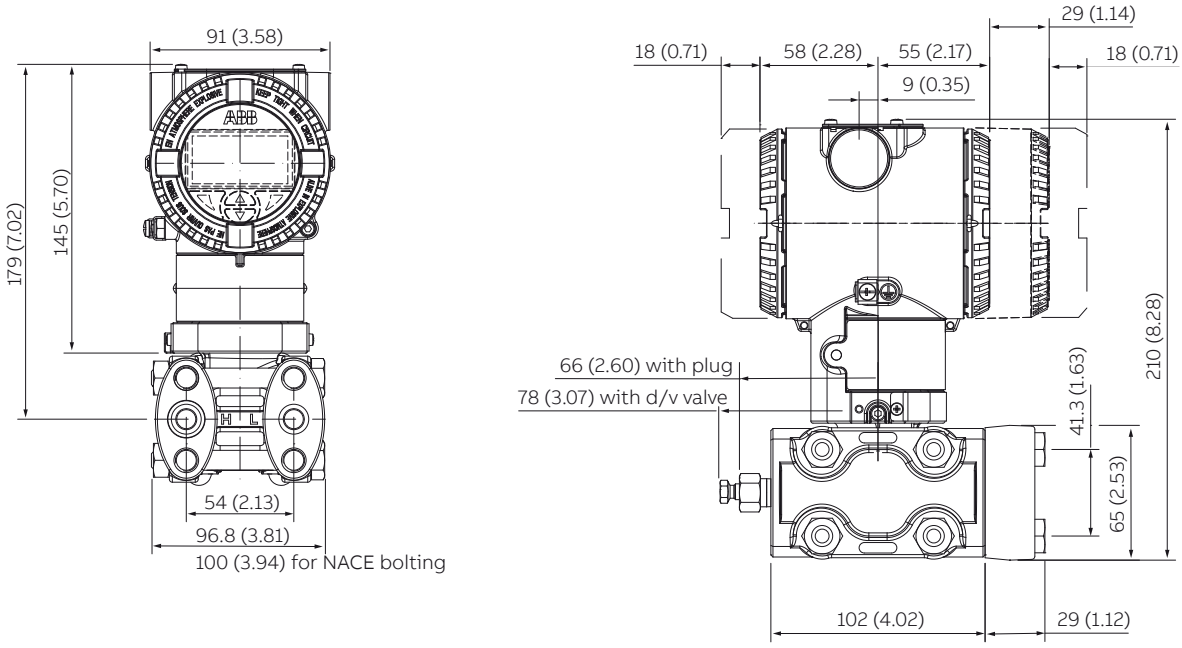

Figure 2 High static transmitter with barrel housing - horizontal flanges

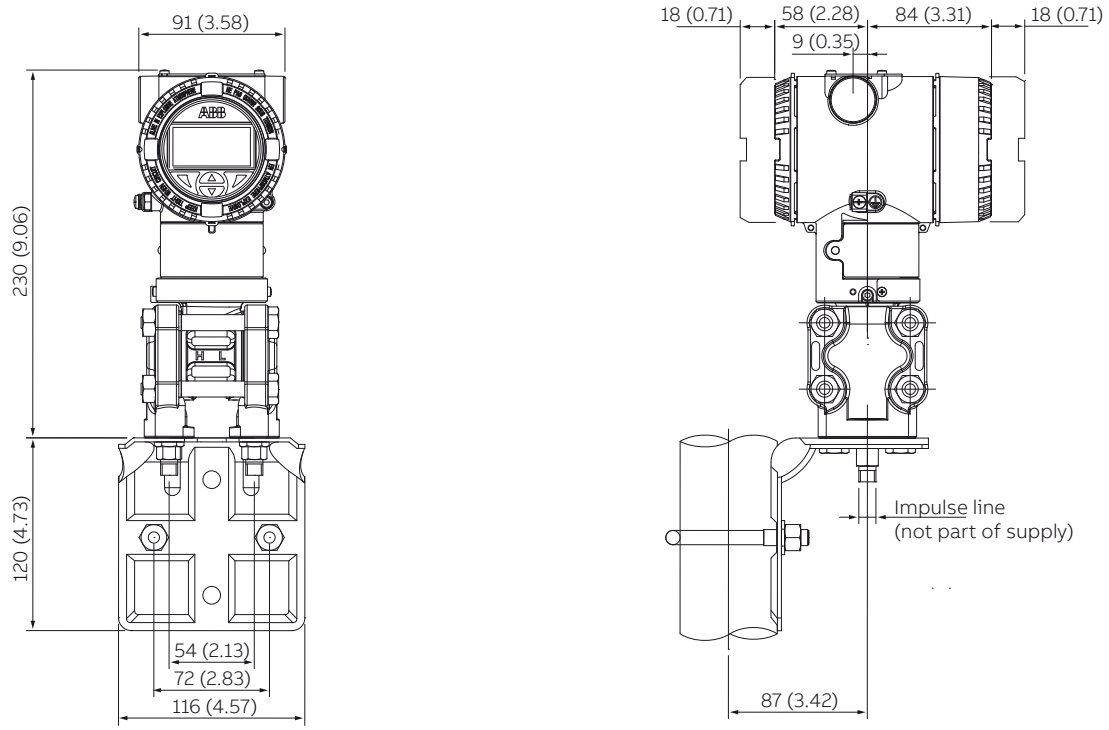

Figure 3 Standard static transmitter with barrel housing - vertical flanges

...Dimensions

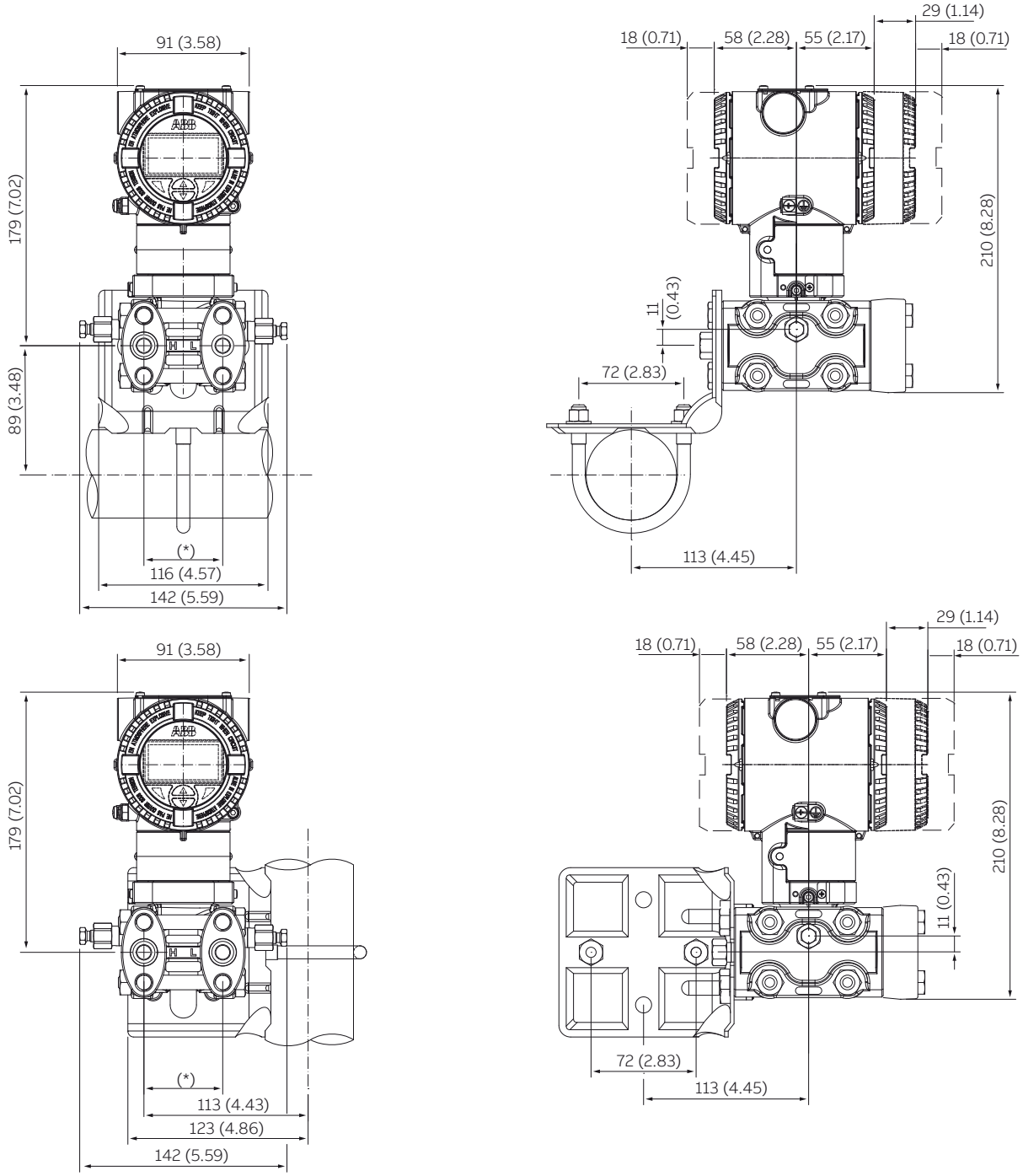

Figure 4 Transmitter on bracket for vertical or horizontal 60 mm. (2 in.) pipe mounting

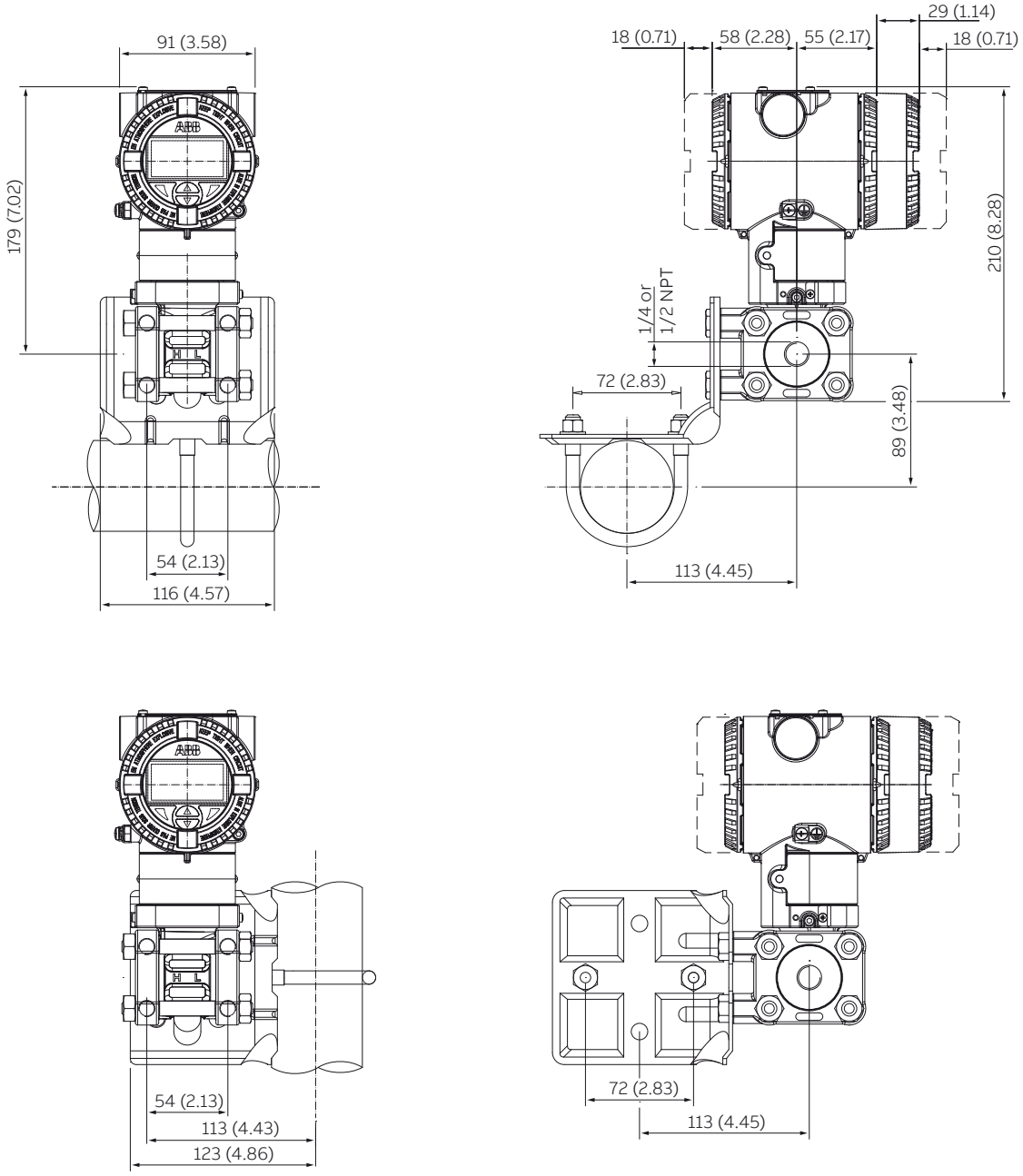

Figure 5 Transmitter with Kynar flanges on bracket for vertical or horizontal 60 mm. (2 in.) pipe mounting

...Dimensions

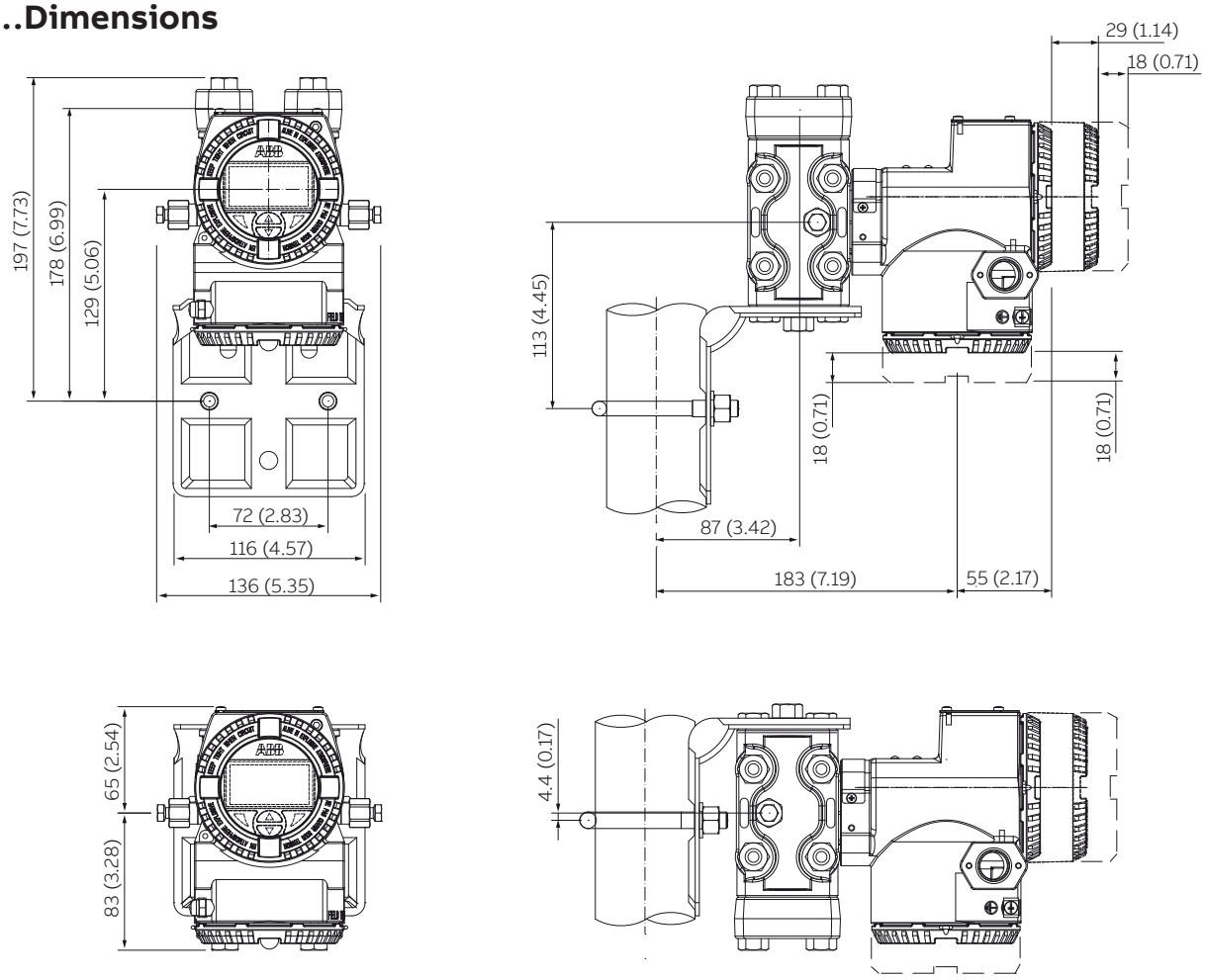

Figure 6 Transmitter with DIN aluminium housing - horizontal flanges on bracket for vertical or horizontal 60 mm. (2 in.) pipe mounting

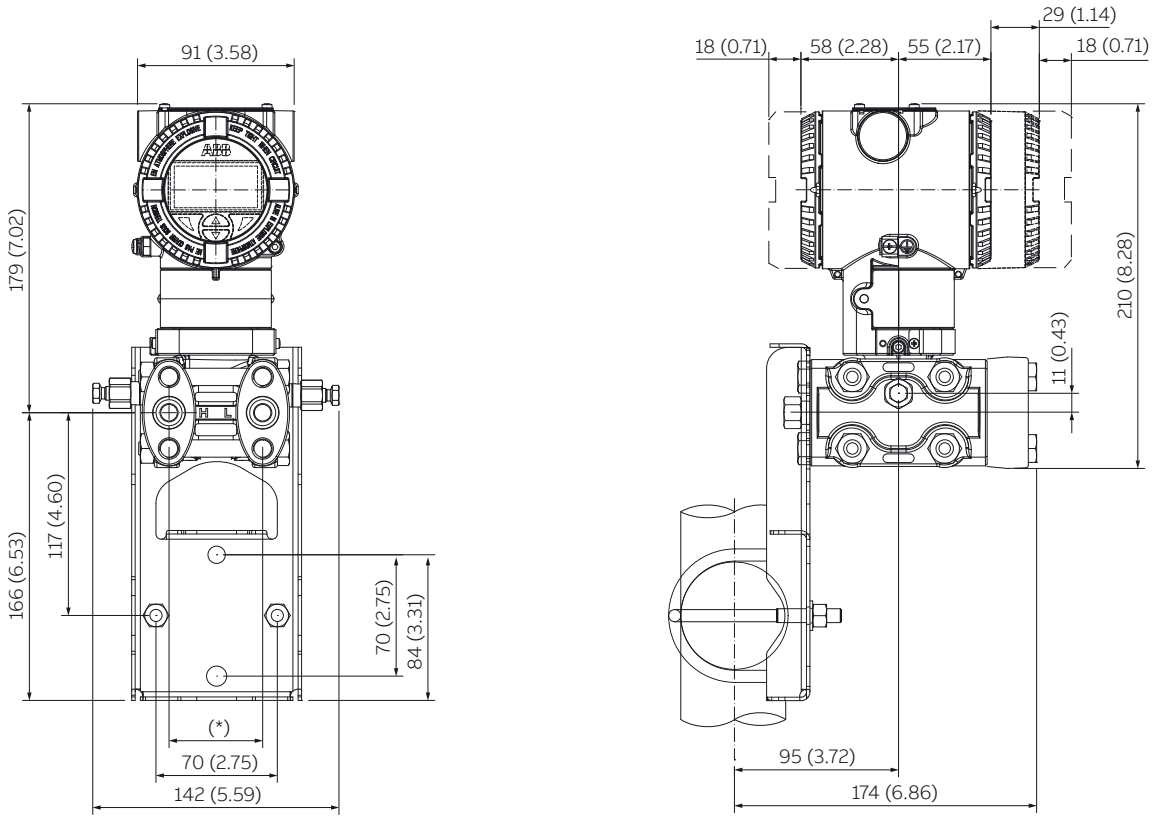

Figure 7 Transmitter with horizontal flanges on flat bracket for vertical or horizontal 60 mm. (2 in.) pipe mounting

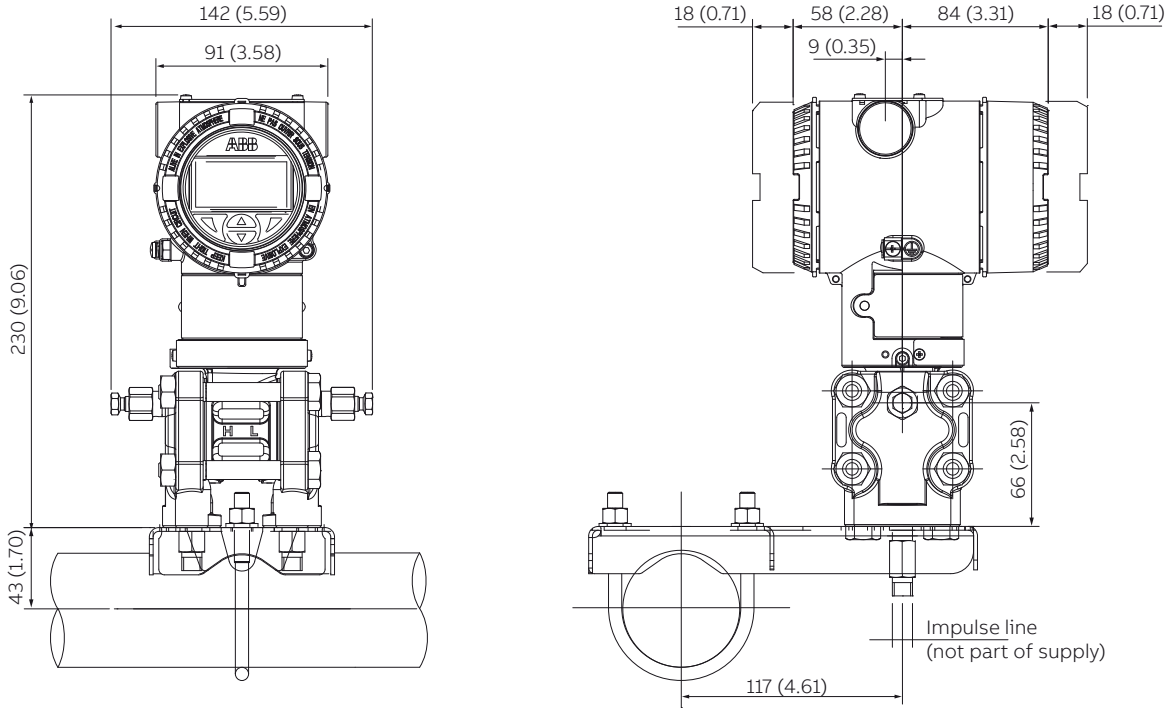

Figure 8 Transmitter with vertical flanges on bracket for vertical or horizontal 60 mm. (2 in.) pipe mounting

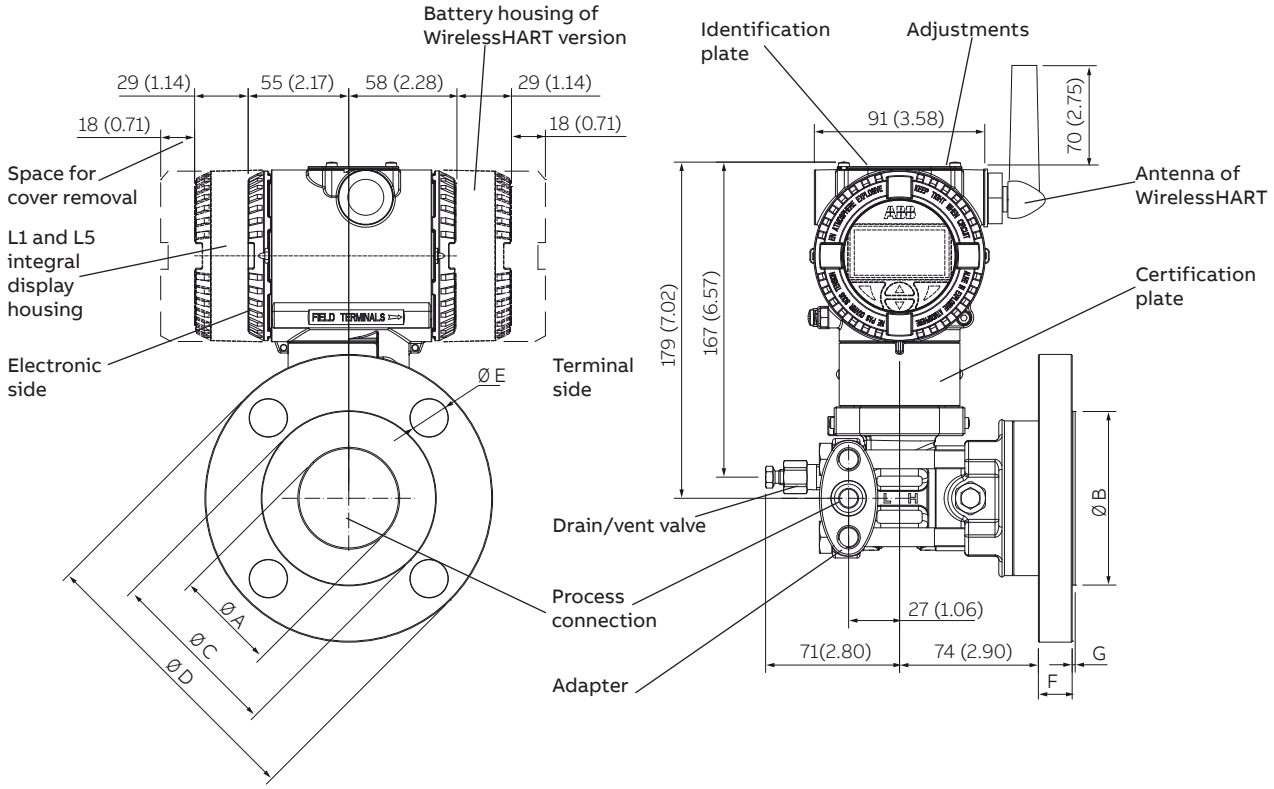

Figure 9 Transmitter with barrel housing - flange mounted version

...Dimensions

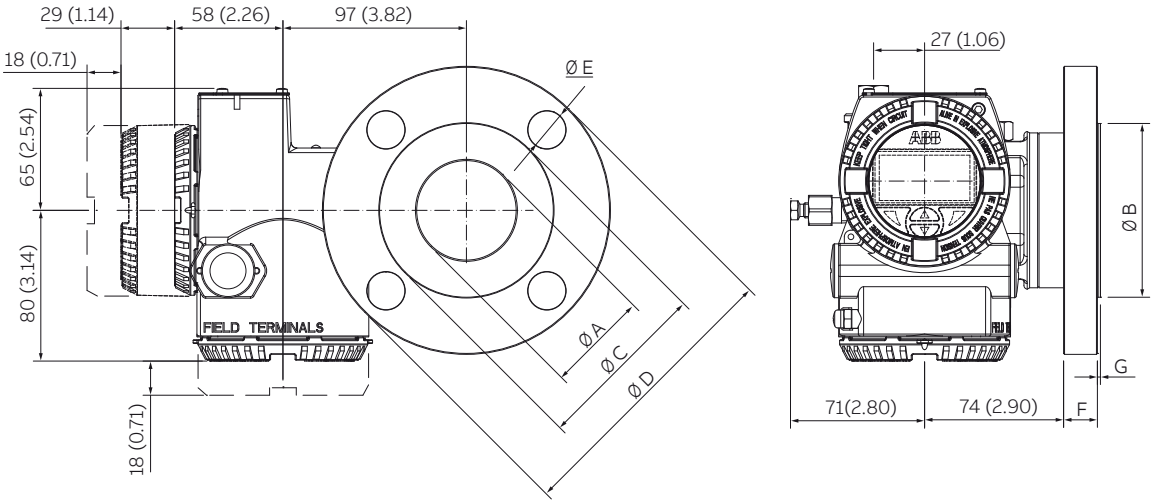

Rating	Size	Dimensions mm (in.)							N° of holes
		A (dia)	B (dia)	C (dia)	D (dia)	E (dia)	F (Note)	G	
ASME Class 150 R.F.	2 in.	53 (2.09)	92 (3.62)	120.5 (4.74)	152.5 (6)	20 (0.79)	19.5 (0.77)	1.6 (0.07)	4
ASME Class 150 R.F.	3 in.	77 (3.04)	127 (5)	152.5 (6)	190.5 (7.5)	20 (0.79)	24 (0.94)	1.6 (0.07)	4
ASME Class 300 R.F.	2 in.	53 (2.09)	92 (3.62)	127 (5)	165 (6.5)	20 (0.79)	22.5 (0.89)	1.6 (0.07)	8
ASME Class 300 R.F.	3 in.	77 (3.04)	127 (5)	168.5 (6.63)	210 (8.26)	22 (0.86)	28.5 (1.12)	1.6 (0.07)	8
EN PN 16 Type B1	DN 50	53 (2.09)	102 (4.02)	125 (4.92)	165 (6.5)	18 (0.71)	20 (0.79)	3 (0.12)	4
EN PN 16 Type B1	DN 80	77 (3.04)	138 (5.43)	160 (6.3)	200 (7.87)	18 (0.71)	20 (0.79)	2 (0.08)	8
EN PN 40 Type B1	DN 50	53 (2.09)	102 (4.02)	125 (4.92)	165 (6.5)	18 (0.71)	20 (0.79)	3 (0.12)	4
EN PN 40 Type B1	DN 80	77 (3.04	138 (5.43)	160 (6.3)	200 (7.87)	18 (0.71)	24 (0.94)	2 (0.08)	8

Note
For ASME, flange thickness tolerance is +3.0 / -0.0 mm (+0.12 / 0.0 in.).
For EN, flange thickness tolerance is +1.0 / -1.3 mm (+0.04 / 0.05 in.) up to 18 mm or ±1.5 mm (±0.06 in.) from 18 to 50 mm from 18 to 50 mm.
Holes of flanges are equally spaced and with reference to transmitter axis they are rotated of 45° for 4 holes versions or of 22.5° for 8 holes versions, with tolerance of 5°.

Figure 10 Transmitter with DIN aluminium housing - flange mounted version

Electrical connections

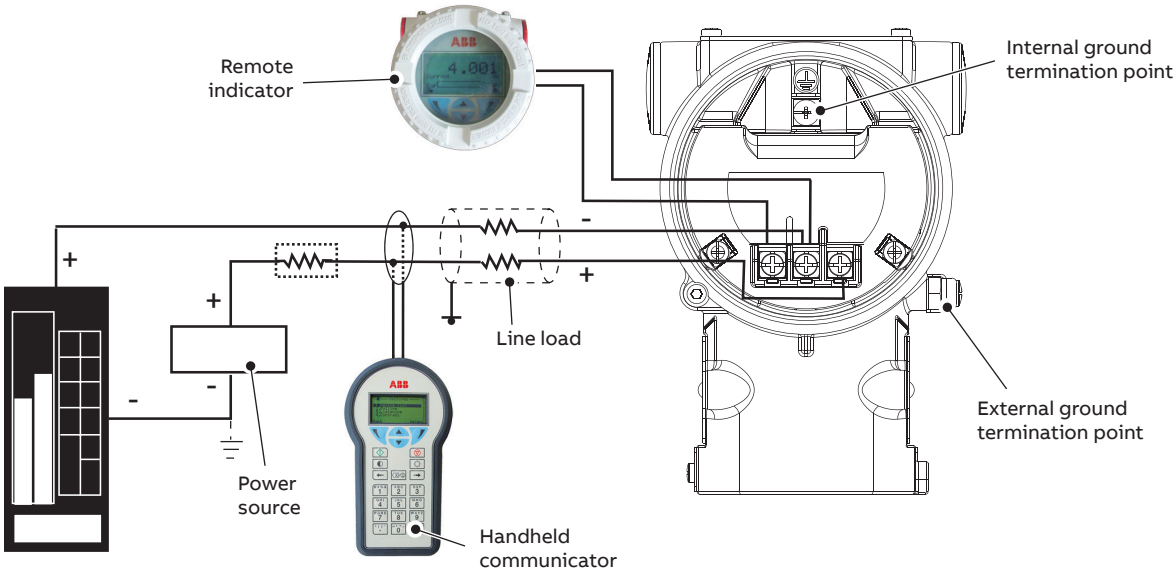

HART hand-held communicator may be connected at any wiring termination point in the loop, providing the minimum resistance is 250 ohm. If this is less than 250 ohm, additional resistance should be added to allow communications. Maximum voltage drop on external remote indicator is 0.7 V DC.

Figure 11 HART Version

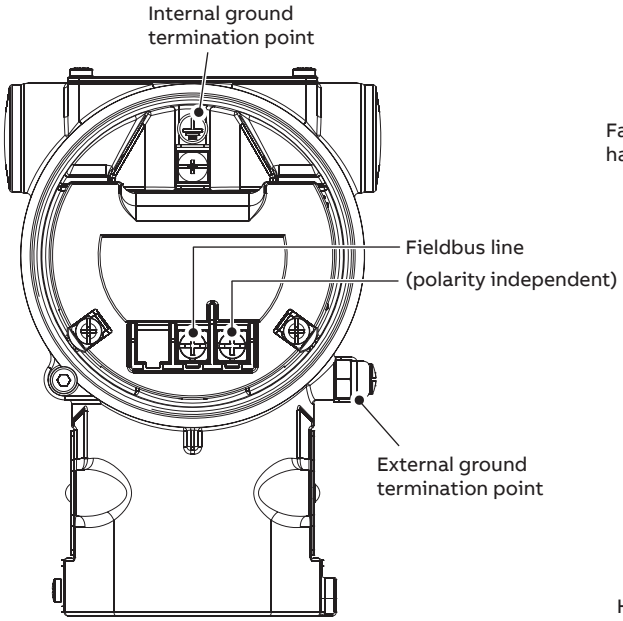

Figure 12 FIELDBUS Versions

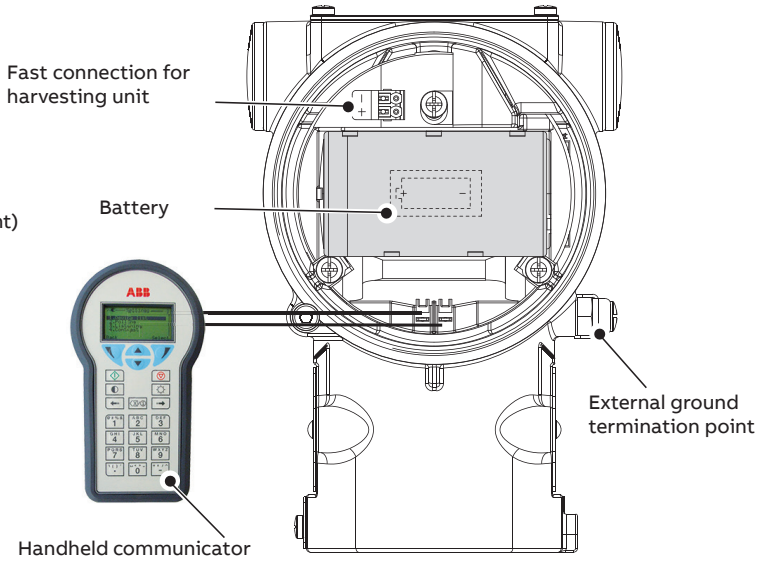

Figure 13 WirelessHART version

Ordering Information

Basic ordering information for model 266DSH Differential Pressure Transmitter

Select one character or set of characters from each category and specify complete catalog number.

Refer to additional ordering information and specify one or more codes for each transmitter if additional options are required.

BASE MODEL - 1st to 6th characters					**266DSH**	**X**	**X**	**X**	**X**	**X**	**X**	**X**
Differential Pressure Transmitter – BASE ACCURACY 0.06 %												
SENSOR - Span limits - 7th character												
0.05 and 1 kPa	0.5 and 10 mbar	0.2 and 4 inH2O	(Notes 17, 30)	"Vx" OPTION IS REQUIRED		A						
0.2 and 4 kPa	2 and 40 mbar	0.8 and 16 inH2O	(Notes 17, 30)			B						
0.54 and 16 kPa	5.4 and 160 mbar	2.16 and 64 inH2O	(Note 17)			E						
0.4 and 40 kPa	4 and 400 mbar	1.6 and 160 inH2O				F						
1.6 and 160 kPa	16 and 1600 mbar	6.4 and 642 inH2O				H						
6 and 600 kPa	0.06 and 6 bar	0.87 and 87 psi				M						
24 and 2400 kPa	0.24 and 24 bar	3.5 and 348 psi				P						
80 and 8000 kPa	0.8 and 80 bar	11.6 and 1160 psi				Q						
160 and 16000 kPa	1.6 and 160 bar	23.2 and 2320 psi	(Note 17)			S						
Application - 8th character												
Differential measurement at standard static pressure							S					
Differential measurement at high static pressure (REMARK)			(Note 30)				H					
Gauge measurement							P					
Diaphragm material / Fill fluid (wetted parts) - 9th character												
AISI 316 L ss		Silicone oil	(Note 2)		NACE			S				
Hastelloy® C-276 (on AISI seat)		Silicone oil	(Note 16, 17, 30)		NACE			H				
Hastelloy® C-276		Silicone oil	(Note 30)		NACE			K				
Monel 400®		Silicone oil	(Notes 2, 17, 30)		NACE			M				
AISI 316 L ss gold plated		Silicone oil	(Notes 2, 17, 30)		NACE			8				
Tantalum		Silicone oil	(Notes 2, 17, 30)		NACE			T				
AISI 316 L ss		Inert fluid - Galden	(Notes 1, 2, 17, 30)		NACE			A				
Hastelloy® C-276		Inert fluid - Galden	(Notes 1, 2, 17, 30)		NACE			F				
Monel 400®		Inert fluid - Galden	(Notes 1, 2, 17, 30)		NACE			C				
AISI 316 L ss gold plated		Inert fluid - Galden	(Notes 1, 2, 17, 30)		NACE			9				
Tantalum		Inert fluid - Galden	(Notes 1, 2, 17, 30)		NACE			D				

continued
see next page

REMARK

HIGH STATIC VERSION IS NOT IN COMPLIANCE WITH ISA 12.27.01 FOR SEALING REQUIREMENTS, SPECIFICALLY FOR FM APPROVAL (Canada).

...Basic ordering information for model 266DSH Differential Pressure Transmitter

Basic ORDERING INFORMATION model 266DSH Differential Pressure Transmitter					**2 6 6 D S H X X X**	**X**	**X**	**X**	**X**
Process flanges/adapters material and connection (wetted parts) - 10th character									
AISI 316 L ss (Horizontal connection)	1/4 in. – 18 NPT-f direct			NACE		A			
AISI 316 L ss (Horizontal connection)	1/2 in. – 14 NPT-f through adapter			NACE		B			
Hastelloy® C-276 (Horizontal connection)	1/4 in. – 18 NPT-f direct		(Notes 3, 30)	NACE		D			
Hastelloy® C-276 (Horizontal connection)	1/2 in. – 14 NPT-f through adapter		(Notes 3, 30)	NACE		E			
Monel 400® (Horizontal connection)	1/4 in. – 18 NPT-f direct		(Notes 3, 4, 17, 30)	NACE		G			
Monel 400® (Horizontal connection)	1/2 in. – 14 NPT-f through adapter		(Notes 3, 4, 17, 30)	NACE		H			
AISI 316 L ss (Vertical connection)	1/4 in. – 18 NPT-f direct		(Note 17)	NACE		Q			
AISI 316 L ss (Vertical connection)	1/2 in. – 14 NPT-f through adapter		(Note 17)	NACE		T			
Hastelloy® C-276 (Vertical connection)	1/4 in. – 18 NPT-f direct		(Notes 3, 17, 30)	NACE		M			
Hastelloy® C-276 (Vertical connection)	1/2 in. – 14 NPT-f through adapter		(Notes 3, 17, 30)	NACE		S			
Monel 400® (Vertical connection)	1/4 in. – 18 NPT-f direct		(Notes 3, 4, 17, 30)	NACE		U			
Monel 400® (Vertical connection)	1/2 in. – 14 NPT-f through adapter		(Notes 3, 4, 17, 30)	NACE		V			
PVDF Kynar® insert on AISI 316 ss flange side	1/4 in. – 18 NPT-f direct		(Notes 5, 6, 17, 30)			P			
PVDF Kynar® insert on AISI 316 ss flange side	1/2 in. – 14 NPT-f direct		(Notes 5, 6, 17, 30)			Z			
Flange mounted version (REFER TO “F26” ACCESSORY CODE FOR QUOTE)			(Notes 2, 6, 17, 30)			R			
Bolts/Gasket (wetted parts) - 11th character									
For standard static, high static and gauge versions	AISI 316 ss	Viton®	(Notes 4, 7, 27, 30)	NACE (non exposed)			1		
	AISI 316 ss	PTFE	(Notes 1, 4, 7, 27)	NACE (non exposed)			2		
For standard static, gauge and flange mounted versions	AISI 316 ss – MWP = 16 MPa	Viton®	(Notes 7, 30)	NACE			3		
	AISI 316 ss – MWP = 16 MPa	PTFE	(Notes 1, 7)	NACE			4		
For high static version	Stainless steel – MWP = 42 MPa	Viton®	(Notes 7, 27, 30)	NACE			3		
	Stainless steel – MWP = 42 MPa	PTFE	(Notes 1, 7, 27)	NACE			4		
For standard static, high static and gauge versions	Alloy steel	Viton®	(Notes 4, 7, 27, 30)	NACE			8		
	Alloy steel	PTFE	(Notes 1, 4, 7, 27, 30)	NACE			9		
For PVDF Kynar process connection	AISI 316 ss spring loaded – MWP = 1 MPa		(Notes 8, 27, 30)	NACE			N		
Housing material and electrical connection - 12th character									
Aluminium alloy (barrel version)	1/2 in. – 14 NPT				(Note 21)			A	
Aluminium alloy (barrel version)	M20 x 1.5 (CM 20)		(TO BE USED for WirelessHART)		(Note 30)			B	
AISI 316 L ss (barrel version) (I2 or I3 required)	1/2 in. – 14 NPT				(Note 21)			S	
AISI 316 L ss (barrel version) (I2 or I3 required)	M20 x 1.5 (CM20)		(TO BE USED for WirelessHART)		(Note 30)			T	
Aluminium alloy (DIN version)	M20 x 1.5 (CM20)		(not Ex d or XP)		(Notes 21, 30)			J	
Output/Additional options - 13th character									
HART and 4 to 20 mA - Standard functionality									7
HART and 4 to 20 mA - Advanced functionality (includes option R1)									1
PROFIBUS PA (includes option R1)									2
FOUNDATION Fieldbus (includes option R1)									3
HART and 4 to 20 mA Safety, certified to IEC 61508 (includes option R1)					(Note 30)				8
WirelessHART (includes option R1)					(Notes 20, 30)				9

NOTE - Option R1 represents the external pushbuttons

...Ordering information

Additional ordering information for model 266DSH Differential Pressure Transmitter
Add one or more 2–digit code(s) after the basic ordering information to select all required options.

					XX	XX	XX	XX
Accuracy								
0.04 % accuracy for applicable ranges				(Notes 7, 17, 18, 21, 27)	D2			
Drain/vent valve (material and position) (wetted parts)								
AISI 316 L ss	on process axis	(Notes 7, 9)	NACE			V1		
AISI 316 L ss	on flange side top	(Notes 7, 10, 17)	NACE			V2		
AISI 316 L ss	on flange side bottom	(Notes 7, 10, 17)	NACE			V3		
Hastelloy® C-276	on process axis	(Notes 7, 11)	NACE			V4		
Hastelloy® C-276	on flange side top	(Notes 7, 12, 17)	NACE			V5		
Hastelloy® C-276	on flange side bottom	(Notes 7, 12, 17)	NACE			V6		
Monel 400®	on process axix	(Notes 7, 13, 17)	NACE			V7		
Monel 400®	on flange side top	(Notes 7, 14, 17)	NACE			V8		
Monel 400®	on flange side bottom	(Notes 7, 14, 17)	NACE			V9		
Hazardous area certifications (see relevant paragraph for complete detailed markings)								
ATEX Intrinsic Safety Ex ia				(Note 30)			E1	
ATEX Explosion Proof Ex db_tb				(Notes 15, 21, 30)			E2	
ATEX Intrinsic Safety Ex ic_tc				(Notes 21, 30)			E3	
Combined ATEX, IECEx, FM Approvals (USA) and FM Approvals (Canada)				(Notes 15, 21, 30)			EN	
FM Approvals (Canada) approval (XP, DIP, IS, NI, Type N)				(Notes 15, 21)			E4	
FM Approvals (USA) approval (XP, DIP, IS, NI, Type N)				(Notes 15, 21)			E6	
FM Approvals (USA and Canada) Intrinsically Safe							EA	
IECEx Intrinsic Safety Ex ia				(Note 30)			E8	
IECEx Explosion Proof Ex db_tb				(Notes 15, 21, 30)			E9	
IECEx Intrinsic Safety Ex ic_tc				(Notes 21, 30)			ER	
NEPSI Intrinsic Safety Ex ia				(Notes 21, 30)			EY	
NEPSI Explosion Proof Ex d				(Notes 15, 21, 30)			EZ	
NEPSI Intrinsic Safety Ex ic				(Notes 21, 30)			ES	
Other hazardous area certifications (ONLY AS ALTERNATIVE TO BASIC CERTIFICATION CODE Ex)								
Technical Regulations Customs Union (EAC) Intrinsic Safety Ex ia for Russia				(Notes 21, 30)				W1
Technical Regulations Customs Union (EAC) Explosion Proof Ex d for Russia				(Notes 15, 21, 30)				W2
Technical Regulations Customs Union (EAC) combined Ex ia and Ex d for Russia				(Notes 15, 21, 30)				WC
Technical Regulations Customs Union (EAC) Intrinsic Safety Ex ia for Kazakhstan				(Notes 21, 30)				W3
Technical Regulations Customs Union (EAC) Explosion Proof Ex d for Kazakhstan				(Notes 15, 21, 30)				W4
Technical Regulations Customs Union (EAC) combined Ex ia and Ex d for Kazakhstan				(Notes 15, 21, 30)				WD
Inmetro (Brazil) Intrinsic Safety Ex ia				(Notes 21, 30)				W5
Inmetro (Brazil) Explosion Proof Ex d				(Notes 15, 21, 30)				W6
Inmetro (Brazil) Intrinsic Safety Ex ic				(Notes 21, 30)				W7
Combined Inmetro (Brazil) - Intrinsic Safety Ex ia, Explosion Proof and Intrinsic Safety Ex ic				(Notes 15, 21, 30)				W8
Technical Regulations Customs Union (EAC) Intrinsic Safety Ex ia for Belarus				(Notes 21, 30)				WF
Technical Regulations Customs Union (EAC) Explosion Proof Ex d for Belarus				(Notes 15, 21, 30)				WG
Technical Regulations Customs Union (EAC) combined Ex ia and Ex d for Belarus				(Notes 15, 21, 30)				WH
Kosha (Korea) Intrinsic Safety Ex ia IIC T6, IP67				(Notes 19, 21, 30)				WM
Kosha (Korea) Explosion Proof Ex d IIC T6, IP67				(Notes 15, 19, 21, 30)				WN
Combined Kosha (Korea) - Intrinsic Safety and Explosion Proof				(Notes 15, 19, 21, 30)				WP

... Additional ordering information for model 266DSH Differential Pressure Transmitter

			XX	XX	XX	XX	XX	XX	XX	XX	XX	XX
Integral LCD												
Digital LCD integral display with integrated keypad		(Note 19)	L1									
Digital LCD integral display with TTG (Through-The-Glass) activated keypad		(Note 19)	L5									
Integrated digital LCD display (ONLY SELECTABLE WITH OUTPUT CODE 7)		(Note 25)	LS									
External non intrusive Z, S and WP pushbuttons												
Transmitters with external pushbutton (ONLY SELECTABLE WITH OUTPUT CODE 7)				R1								
Mounting bracket (shape and material)												
For pipe/wall mounting - Carbon steel	(Not suitable for AISI housing)	(Note 27)			B1							
For pipe/wall mounting - AISI 316 L ss		(Note 27)			B2							
Flat type for box - AISI 316 ss		(Note 27)			B5							
Surge												
Surge/Transient Protector		(Note 21)				S2						
Operating manual (multiple selection allowed)												
German (FOR HART, WirelessHART and PROFIBUS VERSIONS)							M1					
Italian (ONLY FOR HART VERSIONS)							M2					
Spanish (FOR HART, WirelessHART and FOUNDATION Fieldbus VERSIONS)							M3					
French (ONLY FOR HART VERSIONS)							M4					
English							M5					
Portuguese (ONLY FOR HART VERSIONS)							MA					
Russian (ONLY FOR HART VERSIONS)							MB					
Plates language												
German								T1				
Italian								T2				
Spanish								T3				
French								T4				
Additional tag plate												
Supplemental wired-on stainless steel plate									I1			
Tag and certification stainless steel plates and laser printing of tag									I2			
Tag, certification and supplemental wired-on stainless steel plates and laser printing of tag									I3			
Configuration												
Standard – Pressure = inH2O/ psi at 68 °F; Temperature = deg. F										N2		
Standard – Pressure = inH2O/ psi at 39.2 °F; Temperature = deg. F										N3		
Standard – Pressure = inH2O/ psi at 20 °C; Temperature = deg. C										N4		
Standard – Pressure = inH2O/ psi at 4 °C; Temperature = deg. C										N5		
Custom										N6		
Configured for HART revision 5							(Note 31)			NH		
Preparation procedure												
Oxygen service cleaning (only available with inert fill and PTFE gasket) Pmax =10 MPa for Galden; Tmax=60 °C/140 °F						(Notes 17, 30)					P1	
Certificates (multiple selection allowed)												
Inspection certificate EN 10204–3.1 of calibration (9-point)												C1
Inspection certificate EN 10204–3.1 of the cleanliness stage						(Notes 27, 30)						C3
Inspection certificate EN 10204–3.1 of helium leakage test of the sensor module						(Note 30)						C4
Inspection certificate EN 10204–3.1 of the pressure test												C5
Certificate of compliance with the order EN 10204–2.1 of instrument design												C6
PMI test of wetted parts						(Note 30)						CT

...Ordering information

... Additional ordering information for model 266DSH Differential Pressure Transmitter

			XX	XX	XX	XX	XX	XX
Approvals								
Metrologic Pattern for Russia	(NOT APPLICABLE WITH ANY HAZARDOUS AREA CERTIFICATION)	(Note 30)	Y1					
Metrologic Pattern for Kazakhstan	(NOT APPLICABLE WITH ANY HAZARDOUS AREA CERTIFICATION)	(Note 30)	Y2					
Metrologic Pattern for Belarus	(NOT APPLICABLE WITH ANY HAZARDOUS AREA CERTIFICATION)	(Note 30)	Y4					
Chinese pattern	(NOT APPLICABLE WITH ANY HAZARDOUS AREA CERTIFICATION)	(Note 30)	Y5					
DNV GL approval		(Notes 19, 21)		YA				
Approval for Custody transfer (PENDING)				YC				
Conformity to NAMUR NE 021 (2004)	(NOT APPLICABLE WITH SURGE PROTECTOR CODE “S2”)	(Notes 19, 21, 24, 26)		YE				
NSF/ANSI 61 Drinking Water Certified				YN				
CRN (Canadian Registration Number OF14838.5C)				YR				
Material traceability								
Inspection certificate EN 10204–3.1 of process wetted parts (not for gaskets)					H3			
Test report EN 10204–2.2 of pressure bearing and process wetted parts (not for gaskets)					H4			
National radio frequency licence								
Basic countries (Europe, USA, Canada)						FB		
Argentina						FA		
United Arab Emirates						FG		
India						FI		
Mexico						FM		
Electrical connection plug								
One certified stainless steel plug (supplied loose with thread according to housing entries)							Z1	
Accessory								
Manifold mounting and pressure test	(NOT AVAILABLE WITH OXYGEN SERVICE CLEANING - PREPARATION PROCEDURE CODE P1 or WITH VERTICAL FLANGES WHEN SELECTED WITH BRACKET CODE Bx)	(Notes 7, 23, 27, 30)						A1

Accessory ordering information model 266DSH flanged mounted version

Select one character or set of characters from each category and specify complete additional catalog number.

BASE MODEL - 1st to 3rd characters			**F 2 6**	**X**	**X**	**X**	**X**
Process connections of flange mounted version							
Construction - 4th character							
Differential				F			
HIGH PRESSURE SIDE - Process mounting flange rating / Size - 5th characters							
ASME Class 150	2 in.				A		
ASME Class 150	3 in.				B		
ASME Class 300	2 in.				D		
ASME Class 300	3 in.				E		
EN PN 16 / 40	DN 50				M		
EN PN 16	DN 80				N		
EN PN 40	DN 80				L		
HIGH PRESSURE SIDE - Mounting flange material/seat form - 6th characters							
AISI 316 L ss	Form RF (raised face) - serrated finish	(Note 28)	NACE			D	
AISI 316 L ss	EN 1092-1 Type B1 - serrated finish	(Note 29)	NACE			L	
LOW PRESSURE SIDE - Process flanges/adapters material and connection (wetted parts) - 7th character							
AISI 316 L ss (Horizontal connection)	1/4 in. – 18 NPT-f direct		NACE				A
AISI 316 L ss (Horizontal connection)	1/2 in. – 14 NPT-f through adapter		NACE				B

Note 1: Suitable for oxygen service
Note 2: Not available with sensor code A and B
Note 3: Not available with AISI 316L ss or Hastelloy C-276 (on AISI seat) diaphragms code S, H, A
Note 4: Not available with sensor code A
Note 5: Not available with Diaphragm material/Fill fluid code S, H, K, M, A, F, C
Note 6: Not available with sensor code A, Q, S
Note 7: Not available with Process Flanges/Adapters material/connection code P, Z
Note 8: Not available with Process Flanges/Adapters material/connection code A, B, D, E, G, H, Q, T, M, S, U, V
Note 9: Not available with Process flanges/adapters material/connection code D, E, G, H, Q, T, M, S, U, V
Note 10: Not available with Process flanges/adapters material/connection code D, E, G, H, M, S, U, V
Note 11: Not available with Process flanges/adapters material/connection code A, B, G, H, Q, T, M, S, U, V, R
Note 12: Not available with Process flanges/adapters material/connection code A, B, G, H, Q, T, U, V, R
Note 13: Not available with Process flanges/adapters material/connection code A, B, D, E, Q, T, M, S, U, V, R
Note 14: Not available with Process flanges/adapters material/connection code A, B, D, E, Q, T, M, S, R
Note 15: Not available with Housing code J
Note 16: Not available with sensor code E, F, G, H, M, P, Q, and S
Note 17: Not available with high static pressure code H
Note 18: Not available with sensor code A, B, E, S
Note 19: Not available with Output code 7
Note 20: Not available with Housing code A, S, J
Note 21: Not available with Output code 9
Note 22: Not available with Output code 1, 2, 3, 7, 8
Note 23: Not available with Process Flanges/Adapters material/connection code B, E, W, H, T, S, V
Note 24: Not available with Output code 2, 3
Note 25: Not available with Hazardous area certification code WM, WN, WP
Note 26: Not available with Hazardous area certification code EN, E4, E6, EA, EY, EZ, ES, W1, W2, WC, W3, W4, WD, W5, W6, W7, W8, WF, WG, WH, WM, WN, WP
Note 27: Not available with flange mounted version - Process flanges/adapters material/connection code R
Note 28: Not available with EN mounting flange code M, N, L
Note 29: Not available with ASME mounting flange code A, B, D, E
Note 30: Not available NSF/ANSI 61 approval code YN
Note 31: Not available with Output code 2, 3, 9

Standard delivery items (can be differently specified by additional ordering code)
- Adapters supplied loose
- Plug on axis of horizontal connection flange or on side bottom for horizontal connection flange with MWP= 16 MPa; nothing for PVDF Kynar insert or for vertical connection flange (no drain/vent valves)
- General purpose (no electrical certification)
- No display, no mounting bracket, no surge protection
- Short-form leaflet instruction and labels in English (metal nameplate; self-adhesive certification and tag)
- Configuration with kPa and deg. C units
- No test, inspection or material traceability certificates

IMPORTANT REMARK FOR ALL MODELS

THE SELECTION OF SUITABLE WETTED PARTS AND FILLING FLUID FOR COMPATIBILITY WITH THE PROCESS MEDIA IS A CUSTOMER'S RESPONSIBILITY, IF NOT OTHERWISE NOTIFIED BEFORE MANUFACTURING.

NACE COMPLIANCE INFORMATION

1 The materials of constructions comply with metallurgical recommendations of NACE MR0175/ISO 15156 for sour oil field production environments. As specific environmental limits may apply to certain materials, please consult latest standard for further details. AISI 316/316 L, Hastelloy C-276, Monel 400 also conform to NACE MR0103 for sour refining environments.

2 NACE MR-01-75 addresses bolting requirements in two classes:
- Exposed bolts: bolts directly exposed to the sour environment or buried, incapsulated or anyway not exposed to atmosphere
- Non exposed bolts: the bolting must not be directly exposed to sour environments and must be directly exposed to the atmosphere at all times.

266DSH bolting identified by "NACE (non exposed)" are in compliance with requirements of NACE MR0103 when considered "non exposed bolting".

266DSH bolting identified by "NACE" are in compliance with requirements of NACE MR0175 when considered "exposed bolting".

® Hastelloy is a registered trademark of Haynes International
® Monel and Inconel are registered trademarks of Huntington Alloys Corporation
® Galden is a registered trademark of Solvay Specialty Polymers Italy, SpA
® Kynar is a registered trademark of Arkema Inc. Corporation
® HART and WirelessHART are protected trademarks of FieldComm Group, Inc
® PROFIBUS is a registered trademark of PROFIBUS and PROFINET International (PI)
™ FOUNDATION Fieldbus is a trademark of Fieldbus Foundation

Castel Maggiore (BO) 40013
Via Lirone 60/i

e-mail: info@eurotecsrl.com
Tel: +39 051/6321595
Website: www.eurotecsrl.com

C.F.: 04103780377
P.I.: 01596581205

—

ABB Ltd.
Measurement & Analytics
Howard Road St. Neots
Cambridgeshire, PE19 8EU
UK
Tel: +44 (0)870 600 6122
Fax: +44 (0)1480 213 339
Email: enquiries.mp.uk@gb.abb.com

ABB Inc.
Measurement & Analytics
125 E. County Line Road
Warminster, PA 18974
USA
Tel: +1 215 674 6000
Fax: +1 215 674 7183

abb.com/measurement

ABB S.p.A.
Measurement & Analytics
Via Luigi Vaccani 4
22016 Tremezzina (CO)
Italy
Tel: +39 0344 58111

We reserve the right to make technical changes or modify the contents of this document without prior notice. With regard to purchase orders, the agreed particulars shall prevail.
ABB does not accept any responsibility whatsoever for potential errors or possible lack of information in this document.

We reserve all rights in this document and in the subject matter and illustrations contained therein.
Any reproduction, disclosure to third parties or utilization of its contents – in whole or in parts – is forbidden without prior written consent of ABB.

© Copyright 2020 ABB
All rights reserved

3KXP300007R1001

DS/266DSH-EN Rev. N 02.2020