ABB MEASUREMENT & ANALYTICS | DATA SHEET

Model 266CSH,CST, JSH, JST

Multivariable pressure transmitters

Measurement made easy

Engineered solutions for all applications

Base accuracy
- **0.075 % of calibrated span (266CSH, 266JSH)**
- **0.04 % of calibrated span (266CST, 266JST)**

266CSH/CST mass flow measurement with compensation, level measurement with compensation for gases, steam and liquids
- Dynamic compensation of pressure and temperature changes

266JSH/JST high-performance transmitter for measuring differential pressure, absolute pressure and process temperature in a single device

Proven sensor technology together with state-of-the-art digital technology
- Large turn down ratio of up to 100:1

Comprehensive range of functions
- Integrated counting function
- Binary output as pulse / frequency output or limit monitor

10-year stability
- 0.15 % of URL

Flexible configuration options
- Local configuration via keys on LCD indicator

New TTG (Through-The-Glass) key technology
- Enables quick and easy local configuration without the need to open the cover - even in environments with explosion protection

Full compliance with Pressure Equipment Directive (PED) category III

Introduction

266CSH / 266CST

Thanks to their multisensor technology, these transmitters are capable of measuring three separate process variables at the same time and offer the option of dynamic calculation of the following values:

- Mass flow for gases, steam, and liquids by means of dynamic compensation
- Standard volume flow for gases by means of dynamic compensation
- Heat flow for water and steam
- Drum water level and level measurement with density compensation of liquids

The differential pressure and absolute pressure are measured by two integrated sensors. The process temperature is measured by an external standard Pt100 resistance thermometer.

Flow calculation

The flow calculation carried out by these transmitters includes compensation of pressure and / or temperature as well as more complex variables such as discharge coefficient, thermal expansion, Reynolds number, and compressibility factor.
The 266CXX pressure transmitters include flow equations for superheated steam, saturated steam, gases, and liquids - so you only need one device for your system.
Multivariable transmitters represent a more economical solution than the designs that have been used for this type of measuring point up to now, in which three different transmitters for differential pressure, absolute pressure, and temperature report their values to a DCS, PLC, or flow computer.

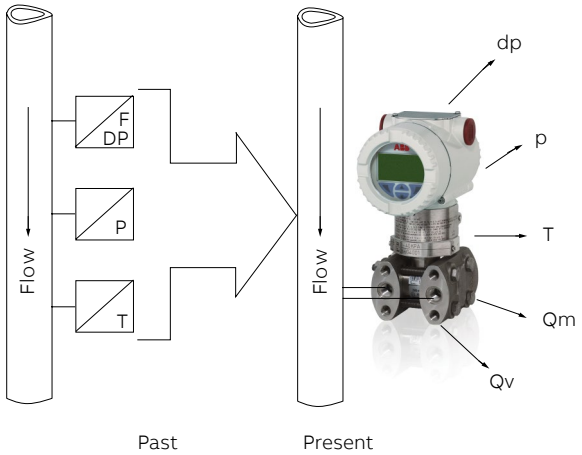

Figure. 1: Flow measurement - past and present

The dynamic mass flow of the 266CXX is calculated using the following equation:

$$Qm \approx \frac{C}{\sqrt{1-\beta^4}} \cdot \varepsilon \cdot d^2 \cdot \sqrt{\rho_1 \cdot dp}$$

Qm = Mass flow
C = Discharge coefficient
β = Diameter ratio
ε = Gas expansion factor
d = Inside diameter of the differential flow sensor
dp = Differential pressure
ρ = Density

The flow calculation process is based on the following standards:

- AGA 3
- DIN EN ISO 5167

...Introduction

Flow coefficient

The discharge coefficient is defined as the actual flow divided by the theoretical flow. It corrects the theoretical equation for the effect on the velocity profile (Reynolds number), assuming that no energy is lost between between the pressure taps and pressure tap location.
It is dependent on the differential flow sensor, the diameter ratio, and the Reynolds number.
Compensation for the discharge coefficient ensures a high level of measuring accuracy for flow measurement with primary elements.

Gas expansion factor

The gas expansion factor corrects for density differences between pressure taps due to expansion of compressible media. It does not apply to liquids which are essentially noncompressible.
The gas expansion factor is dependent on the diameter ratio, the isentropic exponent, the differential pressure, and the static pressure of the medium.

Diameter ratio

The diameter ratio is dependent on the inside diameter of the differential flow sensor and the pipe diameter, which in turn are subject to temperature functions.
If the temperature of the medium being measured changes, the material of the process pipe and differential flow sensor expands or contracts.
The thermal expansion coefficients are dependent on the material of the pipe and differential flow sensor, and are used for calculating the change in diameters. This ensures a high level of flow accuracy in applications with low and high temperatures.

Medium density

The medium density has a direct effect on the flow calculation.
The 266CXX pressure transmitters compensate for the medium density resulting from changes in temperature and / or pressure as follows:

- Gases as a function of p and T based on gas laws, taking compressibility factors into account; for natural gas, based on AGA 8 or SGERG
- Superheated steam as a function of p and T based on steam tables
- Saturated steam as a function of p based on steam tables
- Liquids as a function of T

Mass flow calculations

With the 266CXX pressure transmitters, mass flow calculations
can be configured for the following differential flow sensors:

- Orifice corner pressure taps, ISO
- Orifice flange pressure taps, ISO
- Orifice D and D/2 pressure taps, ISO
- Orifice corner pressure taps, ASME
- Orifice flange pressure taps, ASME
- Orifice D and D/2 pressure taps, ASME
- Orifice flange pressure taps, AGA 3
- Orifice 2.5D and 8D pressure taps
- Small bore orifice, flange pressure taps
- Small bore orifice, corner pressure taps
- ISA 1932 nozzle
- Long radius nozzle wall pressure taps, ISO
- Long radius nozzle wall pressure taps, ASME
- Standard Venturi pipe, rough-cast inlet, ISO
- Standard Venturi pipe, machined inlet, ISO
- Standard Venturi pipe, welded inlet, ISO
- Standard Venturi pipe, rough-cast inlet, ASME
- Standard Venturi pipe, machined inlet, ASME
- Standard Venturi pipe, welded inlet, ASME
- Venturi, nozzle, ISO
- Pitot tube
- Wedge element
- Plus all non-standard flow sensors

ABB offers a complete range of differential flow sensors. We provide the full testing and documentation that your application needs. Whether the requirement is a single orifice plate with a simple Certificate of Conformity or a project requiring full material inspection, traceability, third-party verification, calibration and comprehensive data dossiers – ABB can satisfy all of the requirements. In addition compact solutions are available, OriMaster, a compact orifice flowmeter, and PitoMaster, a compact pitot flowmeter.

Level measurement

The following functions are available for level measurement with pressure and temperature compensation:

- Level measurement with temperature compensation, on open tank
- Level measurement with pressure and temperature
- compensation, on closed tank, with and without diaphragm seal
- Fill volume measurement by means of tank shape specification
- Drum water level measurement

All of the functionality, including all the data required for compensated mass flow or for level measurement, is configured entirely using the PC-based DTM 266-MV. A simplified setting method, which uses the (optional) LCD indicator, is available for flow and level calculation. EDD-based systems such as handheld terminals are also supported.

266JSH / 266JST

This intelligent transmitter provides the user with precise measurements of differential pressure, absolute pressure, and process temperature (the latter by means of an externally connected Pt100 resistance thermometer), in just one device.

Functional specification

Measuring range limits and span limits

Sensor Code	Measuring range upper limit (URL)	Measuring range lower limit (LRL)		Minimum measuring span	
		Models 266CSH/CST	Models 266JSH/JST	Models 266CSH/CST	Models 266JSH/JST
A	1 kPa	0	-1 kPa	0.05 kPa	0.05 kPa
	10 mbar		-10 mbar	0.5 mbar	0.5 mbar
	4 inH2O		-4 inH2O	0.2 inH2O	0.2 inH2O
C	6 kPa	0	-6 kPa	0.2 kPa	0.2 kPa
	60 mbar		-60 mbar	2 mbar	2 mbar
	24 inH2O		-24 inH2O	0.8 inH2O	0.8 inH2O
F	40 kPa	0	-40 kPa	0.4 kPa	0.4 kPa
	400 mbar		-400 mbar	4 mbar	4 mbar
	160 inH2O		-160 inH2O	1.6 inH2O	1.6 inH2O
L	250 kPa	0	-250 kPa	2.5 kPa	2.5 kPa
	2500 bar		-2500 bar	25 mbar	25 mbar
	1000 inH2O		-1000 inH2O	10 inH2O	10 inH2O
N	2000 kPa	0	-2000 kPa	20 kPa	20 kPa
	20 bar		-20 bar	0.2 mbar	0.2 mbar
	290 psi		-290 psi	2.9 psi	2.9 psi
R	10000 kPa	-	-10000 kPa	-	100 kPa
	100 bar		-100 bar		1 bar
	1450 psi		-1450 psi		14.5 psi

Absolute pressure sensor (second sensor)

Sensor Code	Measuring range upper limit (URL)	Measuring range lower limit (LRL)	Minimum measuring span
1	600 kPa	0 abs	6 kPa
	6 bar		0.06 bar
	87 psi		2.9 psi
2	2000 kPa	0 abs	20 kPa
	20 bar		0.2 bar
	290 psi		2.9 psi
3	10000 kPa	0 abs	100 kPa
	100 bar		1 bar
	1450 psi		14.5
4	41000 kPa	o abs	410 kPa
	410 bar		4.1 bar
	5945 psi		59.5 psi

Span limits

Maximum span = URL
(for differential pressure transmitter, can be adjusted up to ± URL (TD = 0.5) within the measuring range limits).

Important

To optimize measuring accuracy, it is recommended that you select the transmitter sensor code with the lowest turn down ratio.

Recommendation for square root function

At least 10 % of measuring range upper limit (URL)

Zero position suppression and elevation

The zero position and span can be set to any value within the measuring range limits listed in the table if:

- already set span ≥ minimum span

Temperature input

Process temperature range -200 ... 850 °C (-328 ... 1562 °F) with external resistance thermometer (Pt100) in four-wire circuit.

Damping

Configurable time constant between 0 and 60 s.
This is in addition to the sensor response time.

Warm-up time

Ready for operation as per specifications in less than 10 s with minimum damping.

Insulation resistance

>100 MΩ at 500 V DC (between terminals and ground).

Operating limits

SEE ALSO DATA SHEET DS/S26 FOR INFORMATION ON OTHER POSSIBLE RESTRICTIONS BASED ON DIAPHRAGM SEAL VERSIONS.

Pressure limits

Gauge pressure limits

The transmitter models 266CRX/JRX can operate without damage within the following overpressure limits

Sensors	Filling fluid	Overpressure limits
Sensor A	Silicone oil	0.5 kPa abs., 5 mbar abs., 0.07 psia and 0.6 MPa, 6 bar, 87 psi or 2 MPa, 20 bar, 290 psi depending on code variant selected 1)
Sensor A	Fluorocarbon (Galden)	17.5 kPa abs., 175 mbar abs., 2.5 psia and 0.6 MPa, 6 bar, 87 psi or 2 MPa, 20 bar, 290 psi depending on code variant selected 1)
Sensors C to R	Silicone oil	0.5 kPa abs., 5 mbar abs., 0.07 psia and 2 MPa, 20 bar, 290 psi or 10 MPa, 100 bar, 1450 psi, or 41 MPa, 410 bar, 5945 psi depending on code variant selected 1)
Sensors C to R	Fluorocarbon (Galden)	17.5 kPa abs., 175 mbar abs., 2.5 psia and 2 MPa, 20 bar, 290 psi or 10 MPa, 100 bar, 1450 psi, or 41 MPa, 410 bar, 5945 psi depending on code variant selected 1)

1) 1 MPa, 10 bar, 145 psi for Kynar-PVDF

Static pressure limits

The transmitter models 266CSX/JSX can operate within the specifications with the following limits:

Sensors	Filling fluid	Static pressure limits
Sensor A	Silicone oil	3.5 kPa abs., 35 mbar abs., 0.5 psia and 0.6 MPa, 6 bar, 87 psi, or 2 MPa, 20 bar, 290 psi depending on code variant selected 1)
Sensor A	Fluorocarbon (Galden)	17.5 kPa abs., 175 mbar abs., 2.5 psia and 0.6 MPa, 6 bar, 87 psi, or 2 MPa, 20 bar, 290 psi depending on code variant selected 1)
Sensors C to R	Silicone oil	3.5 kPa abs., 35 mbar abs., 0.5 psia and 2 MPa, 20 bar, 290 psi, or 10 MPa, 100 bar, 1450 psi or 41 MPa, 410 bar, 5945 psi depending on code variant selected 1)
Sensors C to R	Fluorocarbon (Galden)	17.5 kPa abs., 175 mbar abs., 2.5 psia and 2 MPa, 20 bar, 290 psi, or 10 MPa, 100 bar, 1450 psi or 41 MPa, 410 bar, 5945 psi depending on code variant selected 1)

1) 1 MPa, 10 bar, 145 psi for Kynar-PVDF

Test pressure

The transmitters can withstand a pressure test with the following line pressure without leaking:

Model	Test pressure
266CSX/JSX	1.5 x nominal pressure (static pressure limit) simultaneously on both sides 1)

1) Meets hydrostatic test requirements of ANSI/ISA–S 82.03.

Temperature limits °C (°F)

Environment

This is the operating temperature.

All models	Ambient temperature limits
Silicone oil	-40 ... 85 °C (-40 ... 185 °F)
Fluorocarbon (Galden)	-40 ... 85 °C (-40 ... 185 °F)

All models	Ambient temperature limits
Integral LCD display	-40 ... 85 °C (-40 ... 185 °F)
Viton gasket	-20 ... 85 °C (-4 ... 185 °F)
PTFE gasket	-20 ... 85 °C (-4 ... 185 °F)

Below -20 C (-4 °F) and above 70 °C (158 °F), it may no longer be possible to read the LCD display clearly.

Important

For applications in explosive environments, the temperature range specified on the certificate / approval applies dependent upon the degree of protection sought.

Process

All models	Process temperature limits
Silicone oil	-40 ... 121 °C (-40 ... 250 °F) 1)
Fluorocarbon (Galden)	-40 ... 121 °C (-40 ... 250 °F) 2)
Viton gasket	-20 ... 121 °C (-4 ... 250 °F)
PTFE gasket	-20 ... 85 °C (-4 ... 185 °F)

1) 85 °C (185 °F) for applications under 10 kPa, 100 mbar abs., 1.45 psia up to 3.5 kPa abs., 35 mbar abs., 26 mm Hg
2) 85 °C (185 °F) for applications below atmospheric pressure up to 17.5 kPa abs., 175 mbar abs., 131 mm Hg

Storage

Models 266XST	Storage temperature range
Storage temperature	-50 ... 85 °C (-58 ... 185 °F)
Integral LCD display	-40 ... 85 °C (-40 ... 185 °F)

	Humidity during storage
Relative humidity	Up to 75%

Limits for environmental effects

Electromagnetic compatibility (EMC)

Meets requirements of EN 61326
Overvoltage strength (with surge protection): 4 kV (in acc. with IEC 1000-4-5 EN 61000-4-5).

Pressure Equipment Directive (PED)

Instruments with a maximum operating pressure of 41 MPa, 410 bar, 5945 psi comply with Directive 2014/68/EU category III, module H.

Humidity

Relative humidity: Up to 100 %.
Condensation, icing: Permissible.

Vibration resistance

Acceleration up to 2 g at frequencies of up to 1000 Hz (according to IEC 60068-2-6).
Acceleration limited to 1 g for housing out of stainless steel.

Shock resistance

Acceleration: 50 g
Duration: 11 ms
(according to IEC 60068-2-27).

IP rating

The transmitter is dust and sand-proof and protected against
immersion effects in accordance with EN 60529 (2001) with
IP 67 (IP 68 on request), by NEMA 4X, or by JIS C0920.

Hazardous atmospheres

With or without integral LCD display

Type of protection "Intrinsic safety":

Approval in accordance with ATEX Europa (code E1) and IEC Ex (code E8)
II 1 G Ex ia IIC T6/T5/T4 and II 1/2 G Ex ia IIC T6/T5/T4; IP67.
II 1 D Ex iaD 20 T85°C and II 1/2 D Ex iaD 21 T85 °C; IP67
NEPSI China (Code EY)
Ex ia IIC T4T6, DIP A20TA, T4~T6.

Type of protection "Flameproof (enclosure)":

Approval in accordance with ATEX Europa (code E2) and IEC Ex (code E9)
II 1/2 G Ex d IIC T6 and
II 1/2 D Ex tD A21 T85 °C (–50 °C ≤ Ta ≤+75 °C); IP67.
NEPSI China (Code EZ)
Ex d IIC T6, DIP A21TA, T6.

Type of protection "nL":

ATEX Europa (code E3) and IEC Ex (code ER)
Declaration of Conformity
II 3 G Ex nL IIC T6/T5/T4 and II 3 D Ex tD A22 T85 °C; IP67.
NEPSI China (code EY) Declaration of conformity
Ex nL IIC T4T6, DIP A22TA, T6.

FM approvals for USA (code E6) and FM approvals for Canada (code E4):

- Explosionproof (US): Class I, Div. 1, Groups A, B, C, D
- Explosionproof (Canada): Class I, Div. 1, Groups B, C, D
- Dust ignitionproof : Class II, Div. 1, Groups E, F, G
- Suitable for: Class II, Div. 2, Groups F, G; Class III, Div.1, 2
- Nonincendive: Class I, Div. 2, Groups A, B, C, D
- Intrinsically safe: Class I, II, III, Div. 1, Groups A, B, C, D, E, F, G
  Class I, Zone 0 AEx ia IIC T6/T4, Zone 0 (FM US)
  Class I, Zone 0 Ex ia IIC T6/T4, Zone 0 (FM Canada)

ATEX combined (code EW = E1 + E2 + E3), (code E7 = E1 + E2)

ATEX combined and FM approvals (code EN = EW + E4 + E6)

Combined FM approvals for USA and Canada

- Intrinsic safety (Code EA)
- Flameproof (enclosure) (Code EB)
- Non–incendive (Code EC)

IEC combined (code EH = E8 + E9), (code EI = E8 + E9 + ER)

NEPSI combined (code EP = EY + EZ), (code EQ = EY + EZ + ES)

- EAC–Ex (GOST) Russia, Kazakhstan, Belarus,), based on ATEX
- Inmetro (Brazil), based on ATEX

For ambient temperatures -40 … 85°C (-40 … 185°F) the information based on the temperature classes in the associated certificates, must be complied with.
The temperature sensor circuit (Pt100) and the digital output (pulse / limit value output) must be connected in accordance with the requirements of the Ex certificate.

Specification – electrical data and options

Power supply

The transmitter operates from 10.5 ... 42 V DC with no load and is protected against reversed polarity (additional loads enable operation above 42 V DC).
During use in Ex ia zones and in other intrinsically safe applications, the power supply must not exceed 30 V DC.

Ripple

Max. 20 mV over a 250 Ω load as per HART specifications.

Load limitations

Total loop resistance at 4 ... 20 mA and HART:

$$R\ (k\Omega) = \frac{\text{Voltage supply} - \text{Minimum operating voltage (V DC)}}{22\ \text{mA}}$$

A minimum resistance of 250 Ω is required for HART communication.

Output signal

Two-wire output, 266CXX:
4 … 20 mA based on mass / standard volume flow or fill level, full compensation of all pressure (P) and temperature (T) effects.
Two-wire output, 266JXX:
4 … 20 mA related to differential pressure, pressure, or temperature

The HART communication provides the digital process variables which are superimposed on the 4 to 20 mA signal (protocol in accordance with Bell 202 FSK standard).

Digital output (pulse / limit output)

This digital output can be set as a pulse or limit output (transistor output) by making parameter changes using the software.

NPN transistor with open collector output

Contact switching capacity	10 … 30 V, maximum 120 mA DC
Low-level output voltage	0 … 2 V
High-level output voltage	Maximum 30 V
Quiescent current	500 µA

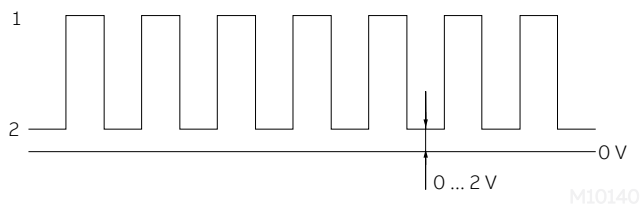

Figure 2: High and low level (pulse output)

1 High level | 2 Low level

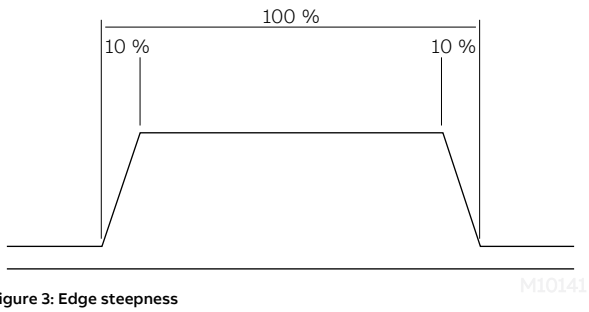

Figure 3: Edge steepness

Pulse output

The scaled, electrically isolated pulse output can be used for
flow measurement by means of an external counter.
Pulse output frequency with 100 %
output
Maximum 10 kHz
Duty cycle 50 % ± 10 % @ 0.1 Hz to 10 kHz
Minimum pulse width 50 µs at 10 kHz, duty cycle 1:1

Limit output

The output is set to a static high or low signal when a given limit is overshot / undershot.

Output function, model 266CXX

The 4 … 20 mA output signal is not linear; instead, it corresponds to the compensated flow or fill level.

Output function, model 266JXX

The 4 … 20 mA output signal corresponds to the differential pressure, pressure, or temperature, depending on the configuration.

Output current limits (according to NAMUR standard)

Overload condition

- Lower limit: 3.8 mA (configurable from 3.8 ... 4 mA)
- Upper limit: 20.5 mA (configurable from 20 ... 21 mA)

Alarm current

- Minimum alarm current: 3.6 mA (configurable from 3.6 ... 4 mA)
- Maximum alarm current: 21 mA (configurable from 20 ... 22 mA)

Standard setting: High alarm current (max. alarm current)

Process diagnostics (PILD)

Plugged impulse line detection (PILD) generates a warning via the HART communication. The device can also be configured to drive the analog output signal to the "alarm current".

...Specification – electrical data and options

LCD display

M10142

Figure 4: Integral LCD display with TTG operation

Integral LCD display (code L1)

Wide screen LCD display, 128 x 64 pixel, 52.5 x 27.2 mm (2.06 x 1.07 in.), dot matrix, multilingual.
Four buttons for device configuration and management.
Easy setup for quick commissioning.
Customized visualizations which the user can select.
Total value and actual value flow indication.
The display can also be used to show static pressure, sensor temperature, and diagnosis notice, as well as make configuration settings.

Integral LCD display with TTG–(Through–The–Glass) operation (code L5)

As with the integral LCD display above, but featuring an innovative TTG (Through–The–Glass) button technology which can be used to activate the device's configuration and management menus without having to remove the transmitter housing cover.
The TTG (Through–The–Glass) buttons are protected against accidental activation.

Specification - measuring accuracy

Stated at reference condition to IEC 60770 ambient temperature of 20 °C (68 °F), relative humidity of 65 %, atmospheric pressure of 1013 hPa (1013 mbar), mounting position with vertical diaphragm and zero based range for transmitter with isolating diaphragms in AISI 316 L ss or Hastelloy and silicone oil fill and HART digital trim values equal to 4 and to 20 mA span end points.
Unless otherwise specified, errors are quoted as % of span.
Some performance referring to the Upper Range Limit are affected by the actual turndown (TD) as ratio between Upper Range Limit (URL) and calibrated span.
IT IS RECOMMENDED TO SELECT THE TRANSMITTER SENSOR CODE PROVIDING THE TURNDOWN VALUE AS LOWEST AS POSSIBLE TO OPTIMIZE PERFORMANCE CHARACTERISTICS.

Dynamic behavior (according to IEC 61298-1)

Sensor	
Sensor F to R	150 ms
Sensor C	400 ms
Sensor A	1000 ms
266CXX: Reaction time for all sensors	70 ms
266JXX: Reaction time for all sensors	40 ms

Step response time (total) = reaction time + time constant

Measuring error

% of calibrated span, consisting of terminal-based nonlinearity, hysteresis, and non-repeatability.

Model	DP Sensor	For TD range	Measuring error
266CSH, 266JSH	A to R 1)	From 1:1 to 10:1	± 0.075 %
	A	From 10:1 to 20:1	± (0.075 + 0.005 x TD - 0.05) %
	C	From 10:1 to 30:1	± (0.075 + 0.005 x TD - 0.05) %
	F to R 1)	From 10:1 to 100:1	± (0.075 + 0.005 x TD - 0.05) %
266CST, 266JST	A to R 1)	From 1:1 to 10:1	± 0.04 %
	A	From 10:1 to 20:1	± (0.04 + 0.005 x TD - 0.05) %
	C	From 10:1 to 30:1	± (0.04 + 0.005 x TD - 0.05) %
	F to R 1)	From 10:1 to 100:1	± (0.04 + 0.005 x TD - 0.05) %

1) Sensor R not with model 266CSH/CST

Recommendation for square root function

At least 10 % of upper measuring range limit (URL)

Model	Pabs sensor (second sensor)	Measuring error
266CXX 266JXX	1 to 4	± 0.1 %

Model	Process temperature measurement (Pt100) in acc. with IEC 60751	Measuring error - Transmitter component
266CXX 266JXX	-200 … 850 °C (-328 … 1,562 °F)	± 0.3 K (0.54 °F)

266CXX: The measuring accuracy of the mass or standard volume flow is not affected by the accuracy of the dp, p, and T measurement alone; rather, it also depends upon the primary device used (discharge coefficient), the pressure and temperature range to be compensated, as well as other parameters.
In typical applications, the flow measurement accuracy (without the primary device accuracy) is ± 0.7 … 0.9 % of the mass flow.

Ambient temperature

Per 20 K change within the limits of -40 to 85 °C
(per 36 °F change within the limits of -40 to 185 °F):

Model	Sensor	For TD range	
266CSH, 266JSH	A	10:1	± (0.08 % URL + 0.06 % measuring span)
	C to R 1)	10:1	± (0.04 % URL + 0.06 % measuring span)
266CST 266JST	A	10:1	± (0.06 % URL + 0.045 % measuring span)
	C to R 1)	10:1	± (0.03 % URL + 0.045 % measuring span)

1) Sensor R not with model 266CSH/CST

In the event of a change to the ambient temperature of –10 °C to 60 °C (14 to 140 °F):

Model	Sensor	For TD range	
266CSH, 266JSH	A	10:1	± (0.16 % URL + 0.065 % measuring span)
	C to R 1)	10:1	± (0.08 % URL + 0.065 % measuring span)
266CST 266JST	A	10:1	± (0.12 % URL + 0.05 % measuring span)
	C to R 1)	10:1	± (0.06 % URL + 0.05 % measuring span)

1) Sensor R not with model 266CSH/CST

...Specification – measuring accuracy

Per 10 K change within the limits of -40 to -10 °C or 60 to 85 °C
(per 18 °F change within the limits of -40 to 14 °F or 140° to 185 °F):

Model	Sensor	For TD range	
266CSH, 266JSH	A	10:1	± (0.66 % URL + 0.04 % measuring span)
	C to R 1)	10:1	± (0.033 % URL + 0.04 % measuring span)
266CST 266JST	A	10:1	± (0.05 % URL + 0.03 % measuring span)
	C to R 1)	10:1	± (0.025 % URL + 0.03 % measuring span)

1) Sensor R not with model 266CSH/CST

Absolute pressure sensor

± (0.08 % URL + 0.08 % measuring span):
Limited to ± (0.1 % URL + 0.1 % measuring span) for the entire temperature range of 125 K within the limits of –40 … 85 °C (-40 … 185 °F).

Static pressure

(zero signal errors may be calibrated out at operating pressure)

Measuring range	Sensors A	Sensors C, F, L, N	Sensor R
Zero signal error	Up to 2 bar: 0.05 % URL	Up to 100 bar: 0.05 % URL	Up to 100 bar: 0.1 % URL
	> 2 bar: 0.05 % URL/100 bar	> 100 bar: 0.05 % URL/100 bar	> 100 bar: 0.1 % URL/100 bar
Span error	Up to 2 bar: 0.05 % span	Up to 100 bar: 0.05 % span	Up to 100 bar: 0.1 % span
	> 2 bar: 0.05 % span/100 bar	> 100 bar: 0.05 % span/100 bar	> 100 bar: 0.1 % span/100 bar

Power supply

Within the limit values for the voltage / load, the total influence is less than 0.005 % of the upper measuring range limit per volt.

Load

Within the load / voltage limits, the total influence is negligible.

Electromagnetic field

Meets all requirements of EN 61326.

Common-mode interference

No influence from 100 V rms @ 50 Hz, or 50 V DC

Mounting position

Rotations in the plane of the diaphragm have a negligible effect. A tilt from the vertical of up to 90° causes a zero point shift of up to 0.35 kPa (3.5 mbar, 1.4 inH2O), which can be corrected by making an appropriate zero position adjustment. There is no effect on the measuring span.

Long–term stability

Sensors C to R:

± 0.15 % of URL over a period of 10 years (± 0.05 % URL/year)

Sensor A:

± 0.3 % of URL over a period of 10 years (± 0.2 % URL/year)

Total performance

Only for differential pressure measurement; similar to DIN 16086.
Within an ambient temperature change range of -10 to 60 °C (14 to 140 °F), up to 10 MPa, 100 bar, 1450 psi static pressure

Model	Sensor	For TD range	Total performance (DP)
266CSH 266JSH	C to N	1:1	± 0.17 % of calibrated span
266RST 266JST	C to N	1:1	± 0.14 % of calibrated span

The total performance includes the measuring error (nonlinearity including hysteresis and non-repeatability), the thermal change in the ambient temperature as regards the zero signal and measuring span, as well as the effect of the static pressure on the zero signal and measuring span.

$$E_{Mperf} = \sqrt{(E_{\Delta Tz} + E_{\Delta Ts})^2 + E_{\Delta Ps}^{\,2} + E_{lin}^{\,2}}$$

E_{Mperf} = Total Performance
$E_{\Delta Tz}$ = Effect of the ambient temperature on the zero signal
$E_{\Delta Ts}$ = Effect of the ambient temperature on the measuring span
$E_{\Delta Ps}$ = Effect of the static pressure on the measuring span
E_{lin} = Measuring error

Specification – physical

(Please refer to the order information to check the availability of different versions of the relevant model)

Materials

Process separating diaphragms 1)

Stainless steel 1.4435 (AISI 316L);
Hastelloy C276;
Monel 400; Monel 400, gold-plated; tantalum

Process flanges, adapters, screw plugs, and vent / drain valves 1)

Stainless steel 1.4404 / 1.4408 (AISI 316L);
Hastelloy C276; Monel 400; Kynar (flange made from stainless
steel AISI 316L with PVDF insert)

Screws and nuts

Screws and nuts made from stainless steel AISI 316, class A4-70 as per UNI 7323 (ISO 3506) in compliance with NACE MR0175 Class II.

Gaskets 1)

Viton (FPM); Buna (NBR); EPDM; PTFE or FEP-coated Viton (only for PVDF Kynar process connection); graphite

Sensor filling fluid

Silicone oil, fluorocarbon (Galden)

Sensor housing

Stainless steel 1.4404 (AISI 316L)

Electronics housing and cover

Aluminum alloy (copper content ≤ 0.3 %) with baked epoxy finish (color: RAL 9002); stainless steel AISI 316L.

O-ring cover

Buna N (Perbunan)

Mounting bracket 2)

Galvanized C steel with chromium passivation; stainless steel AISI 316, AISI 316L.

Local zero point, measuring span, and write protection settings

Fiber glass-reinforced polyphenylene oxide (removable)

Plates

Stainless steel (AISI 316) for transmitter name plate, certification plate, optional measuring point tag plate / settings plate fastened to the electronics housing, and optional tag
plate with customer data. All plates laser-labeled.

1 Transmitter parts that come into contact with fluid

2 U-bolt material: stainless steel AISI 400;
screw material: high-strength alloy steel or stainless steel AISI 316

...Specification – physical

Calibration

Standard:

- 0 to measuring range upper limit, for ambient temperature and atmospheric pressure

Optional:

- To specified measuring span

Optional extras

Mounting bracket

For vertical and horizontal 60 mm (2 in.) pipes or wall mounting

LCD display

Can be rotated in 90° increments into 4 positions

Additional tag plates

Code I2: For measuring point tag (up to 30 characters) and calibration specifications (up to 30 characters: lower and upper value plus unit), attached to transmitter housing.

Code I1: For customer data (4 lines with 30 characters each), attached to transmitter housing with wire.

Overvoltage protection

- Code S2

Cleaning stage for oxygen application (O2)

Code P1

Certificates (inspection, implementation, characteristics, material certificate)

Code Cx and Hx

Name plate and operating instruction language

Code Tx and Mx

Communication plug connector

Code Ux

Process connections

Flanges: 1/4-18 NPT on the process axis
Adapters: 1/2-14 NPT on the process axis
Center distance:
54 mm (2.13 in.) between flanges; 51 mm, 54 mm, or 57 mm
(2.01 in., 2.13 in., or 2.24 in.) between adapters
Fastening screw threads:
7/16–20 UNF with 41.3 mm center distance
or with process flange code C:
M10 with operating pressures of up to 10 MPa, 100 bar, 1450 psi
M12 with higher operating pressures of up to 41 MPa, 410 bar, 5945 psi

Electrical connections

Two 1/2-14 NPT or M20 x 1.5 threaded bores for cable glands, directly on housing.

Terminals

Three connections for signal / external display, four connections for a Pt100 resistance thermometer with 4-wire technology, and two connections for the digital output (pulse / alarm output). For wire cross sections of up to 2.5 mm2 (14 AWG) and connection points for testing and communication purposes.

Grounding

Internal and external ground terminals are provided for 6 mm2 (10 AWG) wire cross sections.

Mounting position

The transmitters can be installed in any position.
The electronic housing can be rotated into any position. A stop is provided to prevent overturning.

Weight

(without options)
Approximately 3.8 kg (8.4 lb); add 1.5 kg (3.3 lb) for housings
made from stainless steel.
Add 650 g (1.5 lb) for packaging

Packaging

Carton with dimensions of approx.
28 x 23 x 24 cm (11 x 9 x 9 in.)

Configuration

Standard configuration

Transmitters are calibrated at the factory to the customer's specified measuring range. The calibrated range and measuring point number are provided on the name plate. If this data has not been specified, the transmitter will be delivered with the plate left blank and the following configuration:

Physical unit	kPa
4 mA	Zero
20 mA	Measuring range upper limit (URL)
Output	266CXX: Square root 266JXX: Linear
Damping	1 s
Transmitter interference mode	High alarm
Software tag (max. 8 characters)	Blank
Optional LCD display	PV in kPa; output in mA and in percent as bargraph

Any or all of the configurable parameters listed above - including the lower and upper range values (with the same unit of measurement) - can easily be changed using a portable HART handheld communicator or a PC running the configuration software with the DTM for 266 models. Specifications concerning the flange type and materials, O-ring and vent / drain valve materials, and additional device options are stored in the transmitter database.

Customer-specific configuration (option N6)

The following information can be specified in addition to the standard configuration parameters:

Description	16 alphanumeric characters
Supplementary information	32 alphanumeric characters
Date	Day, month, year

Mounting dimensions

(not design data) - dimensions in mm (inch)

Transmitter with barrel housing - Horizontal flanges

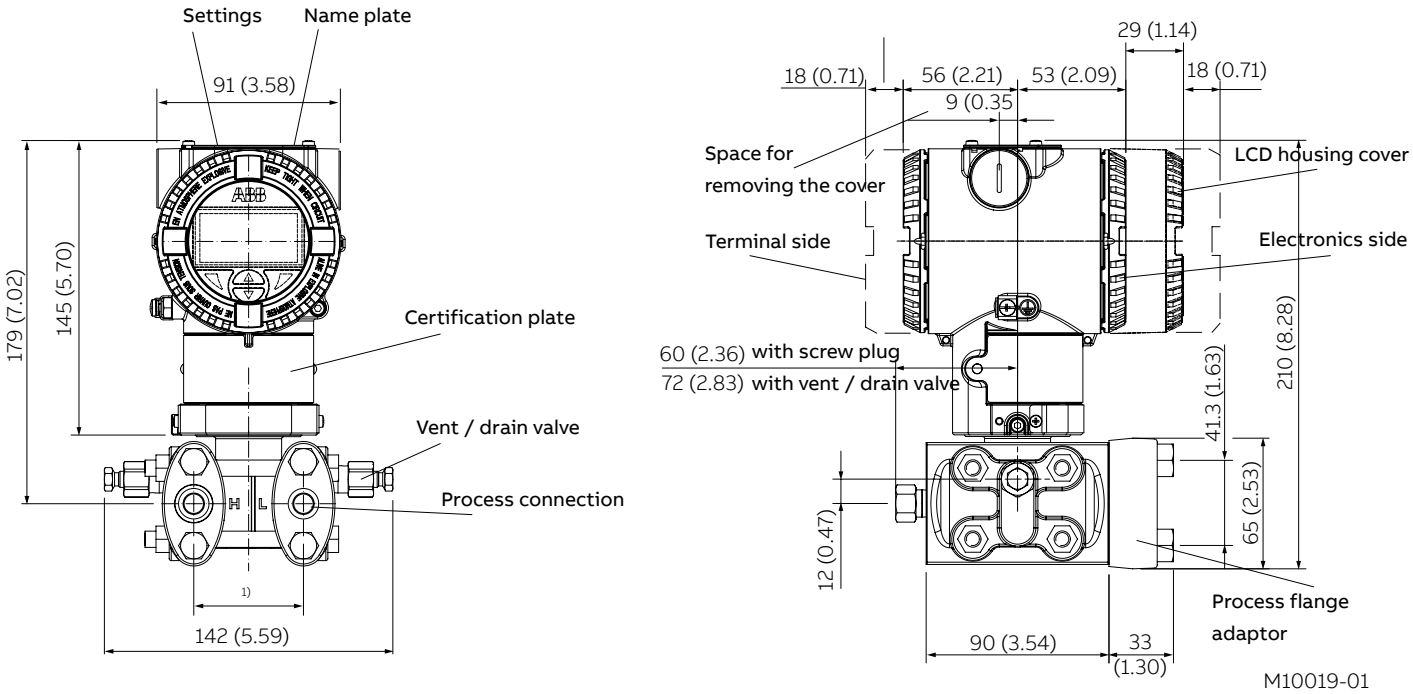

Figure 5: Barrel housing - Horizontal flanges

1) 54 (2.13) mm (in.) via 1/4 - 18 NPT process flanges
51 (2.01), 54 (2.13), or 57 (2.24) mm (in) via 1/2 - 14 NPT adapter flanges.
Note: Process connection and gasket groove comply with IEC 61518. Thread for attaching adapter flanges or other components (e.g., manifold) to process flange: 7/16 -20 UNF.

Transmitter with barrel housing - Vertical flanges

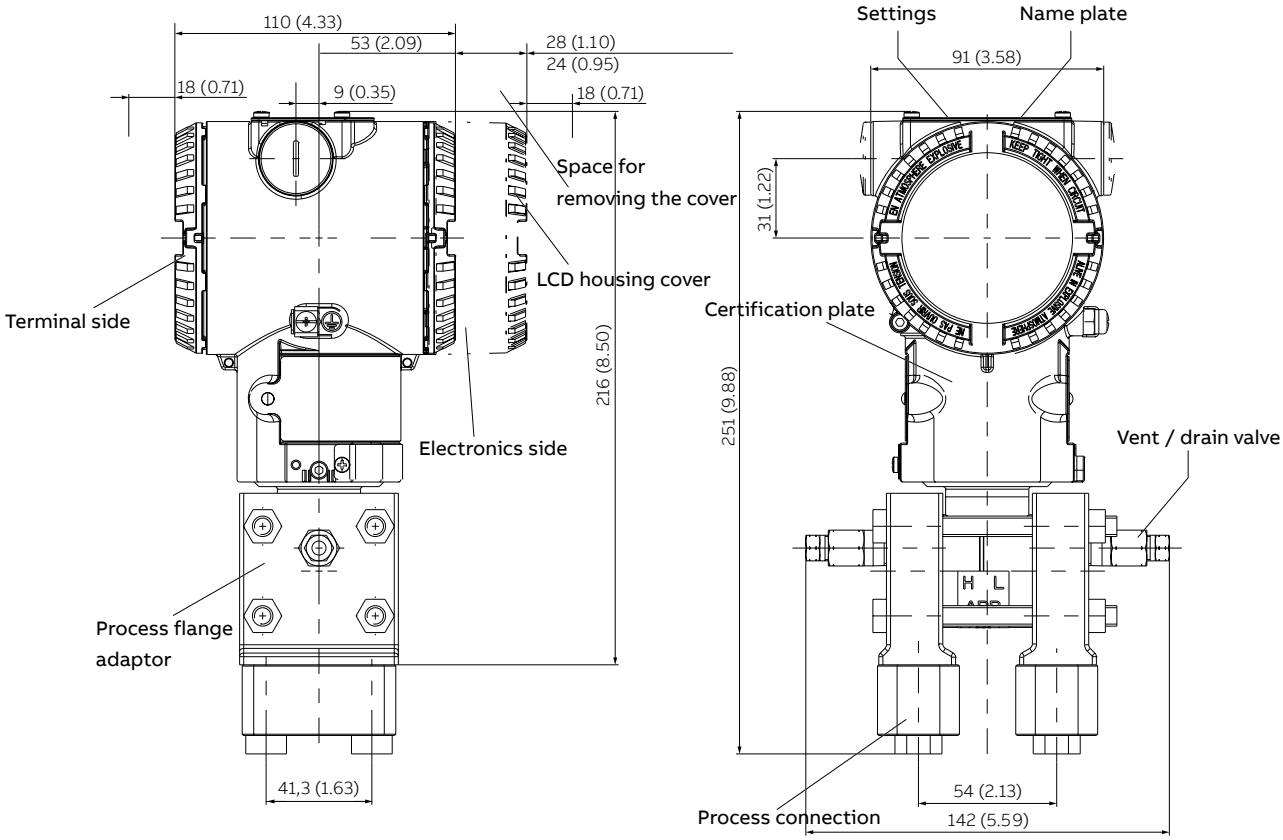

Figure 6: Barrel housing - Vertical flanges

Mounting dimensions

(not design data) - dimensions in mm (inch)

Transmitter with mounting bracket, for vertical or horizontal mounting on 60 mm (2 in.) pipe

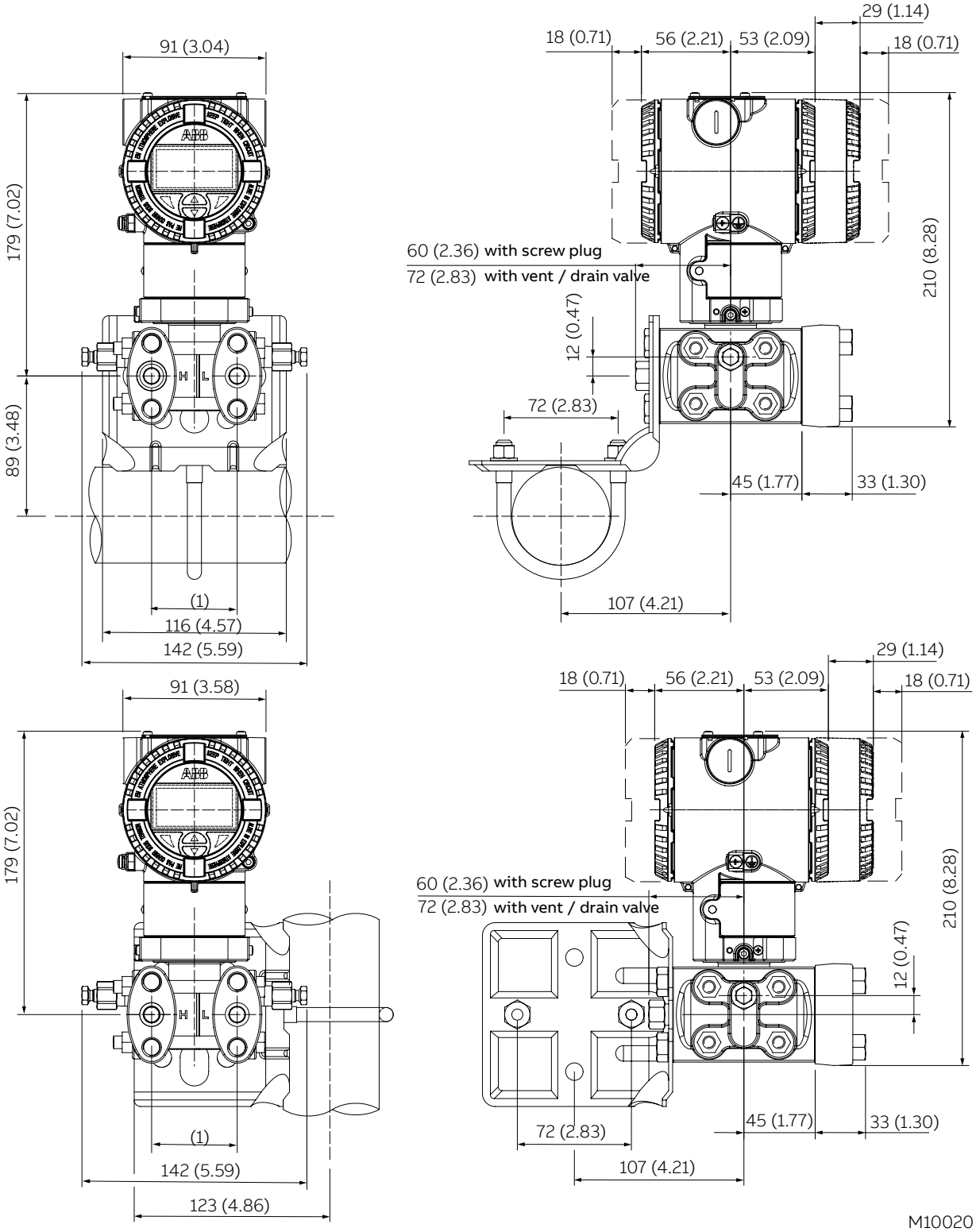

Figure 7: Pipe mounting - Barrel housing

1) 54 (2.13) mm (in.) via 1/4 - 18 NPT process flanges
51 (2.01), 54 (2.13), or 57 (2.24) mm (in) via 1/2 - 14 NPT adapter flanges.
Note: Process connection and gasket groove comply with IEC 61518. Thread for attaching adapter flanges or other components (e.g., manifold) to process flange: 7/16 -20 UNF.

Transmitter with DIN aluminum housing - horizontal flanges with mounting bracket for vertical or horizontal mounting on 60 mm (2 in.) pipe

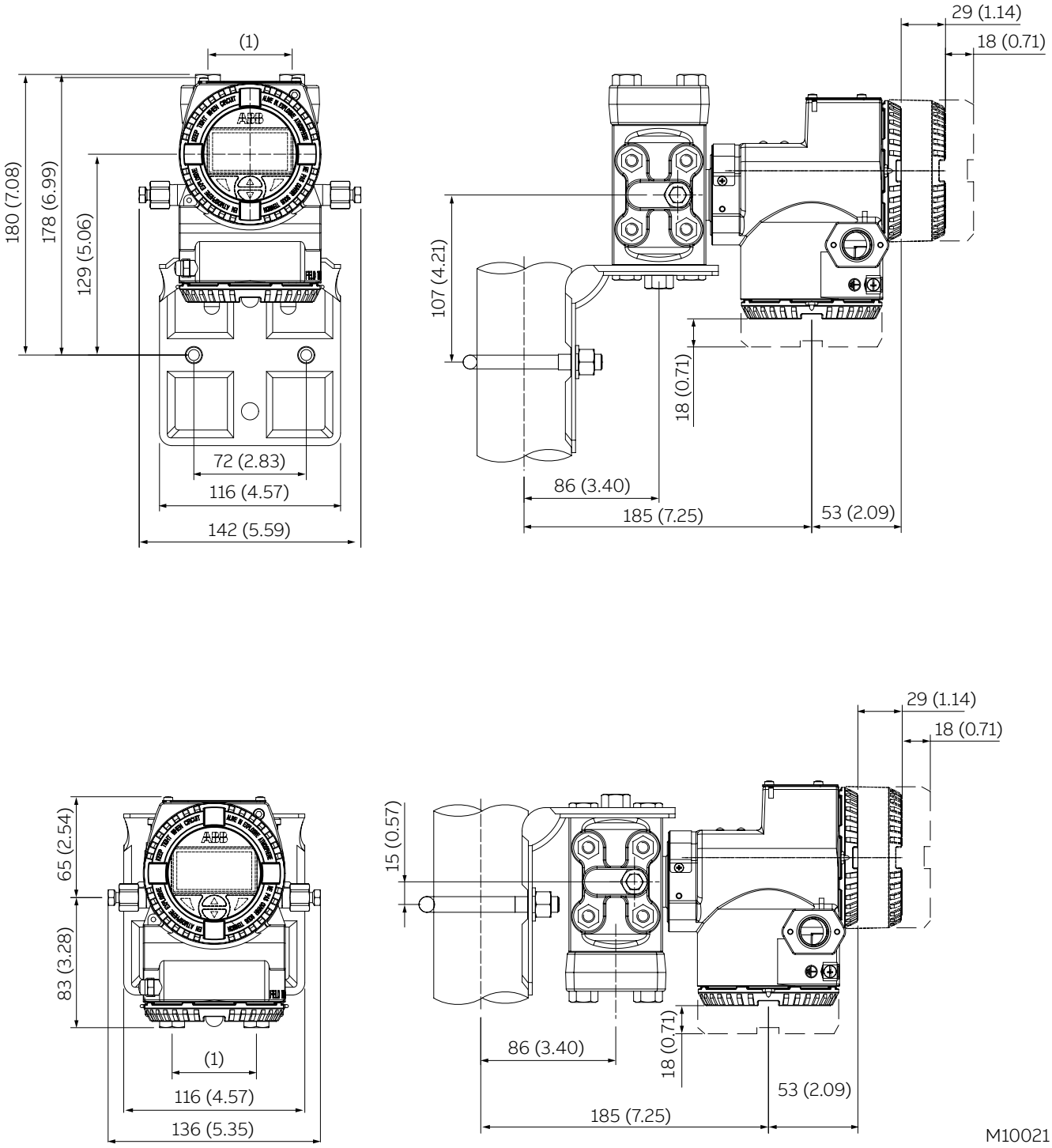

Figure 8: Pipe mounting - DIN housing

1) 54 (2.13) mm (in.) via 1/4 - 18 NPT process flanges
51 (2.01), 54 (2.13), or 57 (2.24) mm (in) via 1/2 - 14 NPT adapter flanges.
Note: Process connection and gasket groove comply with IEC 61518. Thread for attaching adapter flanges or other components (e.g., manifold) to process flange: 7/16 -20 UNF.

Mounting dimensions

(not design data) - dimensions in mm (inch)

Transmitter with flat bracket, for vertical or horizontal mounting on 60 mm (2 in.) pipe

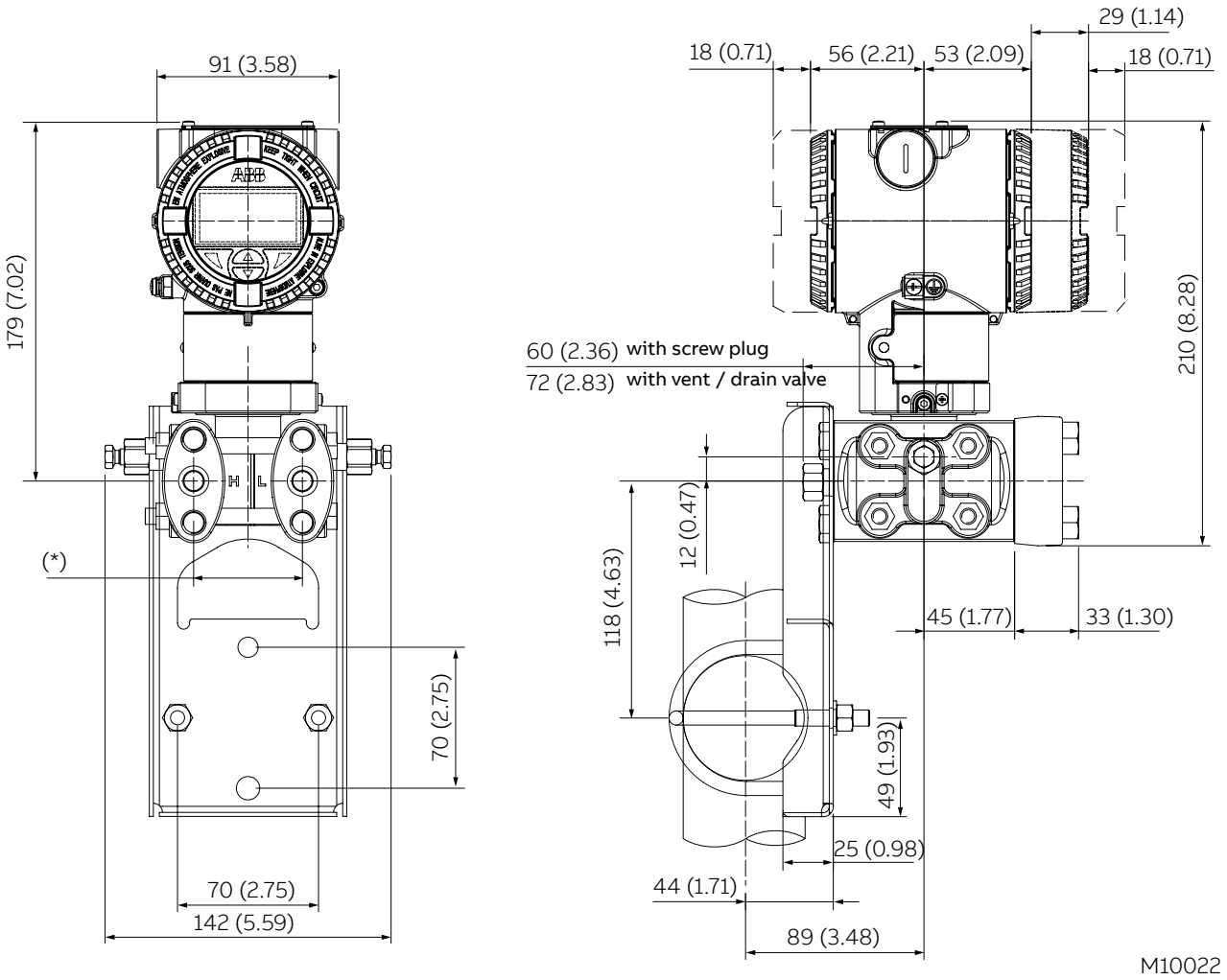

Figure 9: Flat bracket for pipe mounting - Barrel housing

Electrical connections

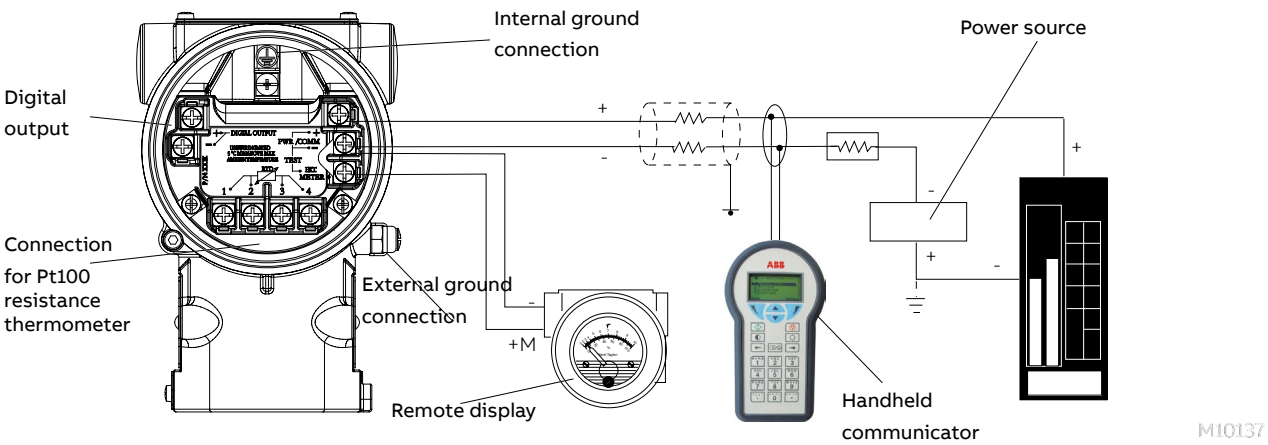

Figure 9: Electrical connections

The HART handheld terminal can be connected to any wiring termination point in the loop, provided there is a minimum resistance of 250 Ω between the handheld terminal and transmitter power supply. If this is less than 250 Ω, additional resistance needs to be incorporated in order to enable communication.

Ordering information

Basic ordering information model 266CSH Multivariable transmitter for mass flow and level.

Select one character or set of characters from each category and specify complete catalog number.

Refer to additional ordering information and specify one or more codes for each transmitter if additional options are required.

Base model - 1st to 6th characters				**2 6 6 C S H**	**X**	**X**	**X**	**X**	**X**	**X**	**X**
Multivariable transmitter for mass flow and level, base accuracy 0.075 %											
Sensor Span Limits – 7th character											
0.05 and 1 kPa	0.5 and 10 mbar	0.2 and 4 in. H_2O	(Note: 1)		A						
0.2 and 6 kPa	2 and 60 mbar	0.8 and 24 in. H_2O			C						
0.4 and 40 kPa	4 and 400 mbar	1.6 and 160 in. H_2O			F						
2.5 and 250 kPa	25 and 2500 mbar	10 and 1000 in. H_2O			L						
20 and 2000 kPa	0.2 and 20 bar	2.9 and 290 psi			N						
Maximum Working Pressure – 8th character											
0 and 0.6 MPa	0 and 6 bar	0 and 87 psi	(only with Sensor Span Limits code A)			1					
0 and 2 MPa	0 and 20 bar	0 and 290 psi				2					
0 and 10 MPa	0 and 100 bar	0 and 1450 psi	(not with Sensor Span Limits code A)			3					
0 and 41 MPa	0 and 410 bar	0 and 5945 psi	(not with Sensor Span Limits code A)			4					
Diaphragm Material / Fill Fluid – 9th character											
AISI 316L SST (1.4435)		Silicone oil					NACE	S			
Hastelloy® C-276		Silicone oil					NACE	K			
Monel 400®		Silicone oil					NACE	M			
Monel 400® gold-plated		Silicone oil					NACE	V			
Tantalum		Silicone oil					NACE	T			
AISI 316L SST (1.4435)		Inert fluid – Galden (Suitable for oxygen applications)	(Note: 2)				NACE	A			
Hastelloy® C-276		Inert fluid – Galden (Suitable for oxygen applications)	(Note: 2)				NACE	F			
Monel 400®		Inert fluid – Galden (Suitable for oxygen applications)	(Note: 2)				NACE	C			
Monel 400® gold-plated		Inert fluid – Galden (Suitable for oxygen applications)	(Note: 2)				NACE	Y			
Tantalum		Inert fluid – Galden (Suitable for oxygen applications)	(Note: 2)				NACE	D			
Process Flanges and Adapters Material / Connection – 10th character											
AISI 316L SST (1.4404 / 1.4408)		1/4-18 NPT female direct		(horizontal connection)			NACE		A		
AISI 316L SST (1.4404 / 1.4408)		1/2-14 NPT female through adapter		(horizontal connection)			NACE		B		
AISI 316L SST (1.4404 / 1.4408)		1/4-18 NPT female direct (DIN 19213)		(horizontal connection)			NACE		C		
Hastelloy® C-276		1/4-18 NPT female direct		(horizontal connection)			NACE		D		
Hastelloy® C-276		1/2-14 NPT female through adapter		(horizontal connection)			NACE		E		
Monel 400®		1/4-18 NPT female direct		(horizontal connection)			NACE		G		
Monel 400®		1/2-14 NPT female through adapter		(horizontal connection)			NACE		H		
Kynar (PVDF)		1/4-18 NPT female direct (MWP= 1 MPa/10 bar/ 145 psi)		(insert on side or flange)					P		
AISI 316L SST (1.4404 / 1.4408)		1/4-18 NPT female direct		(vertical connection)			NACE		Q		

continued on next page

			X	X	X
Bolts Material / Gaskets Material – 11th character					
AISI 316L SST (NACE - non exposed to H2S) / Viton (Suitable for oxygen applications)		(Note: 2)	3		
AISI 316L SST (NACE - non exposed to H2S) / PTFE (Max. 25 MPa / 250 bar / 3625 psi)			4		
AISI 316L SST (NACE - non exposed to H2S) / EPDM			5		
AISI 316L SST (NACE - non exposed to H2S) / Perbunan			6		
AISI 316L SST (NACE - non exposed to H2S) / Graphite			7		
AISI 316L SST (NACE - non exposed) / FEP (only available with Kynar [PVDF] process connection)			T		
Housing Material / Electrical Connection – 12th character					
Aluminium alloy (Barrel type)	1/2-14 NPT			A	
Aluminium alloy (Barrel type)	M20 x 1.5			B	
AISI 316L SST (Barrel type)	1/2-14 NPT			S	
AISI 316L SST (Barrel type)	M20 x 1.5			T	
Aluminium alloy (DIN type)	M20 x 1.5			J	
Output – 13th character					
HART digital communication and 4 … 20 mA		(No additional options)			H
HART digital communication and 4 … 20 mA		(Options requested by "Additional ordering code")			1

...Ordering information

...ADDITIONAL ORDERING INFORMATION for model 266CSH

Add one or more 2-digit code(s) after the basic ordering information to select all required options

				XX	XX
Vent and drain valve Material / Position					
AISI 316L SST (1.4404)	On process axis	NACE		V1	
AISI 316L SST (1.4404)	On flanges side top	NACE		V2	
AISI 316L SST (1.4404)	On flanges side bottom	NACE		V3	
Hastelloy® C-276	On process axis	NACE		V4	
Hastelloy® C-276	On flanges side top	NACE		V5	
Hastelloy® C-276	On flanges side bottom	NACE		V6	
Monel 400®	On process axis	NACE		V7	
Monel 400®	On flanges side top	NACE		V8	
Monel 400®	On flanges side bottom	NACE		V9	
Explosion Protection Certification					
ATEX Intrinsic Safety Ex ia					E1
ATEX Explosion Proof Ex db			(Note: 3)		E2
ATEX Intrinsic Safety Ex ic					E3
FM approval (Canada) (Only available with 1/2-14 NPT or M20 electrical connections)			(Note: 3)		E4
FM approval (USA) (Only available with 1/2-14 NPT or M20 electrical connections)			(Note: 3)		E6
FM approvals (USA and Canada) Intrinsic Safety					EA
FM approvals (USA and Canada) Explosion Proof			(Note: 3)		EB
FM approvals (USA and Canada) Nonincendive					EC
Combined ATEX, IECEx and FM approvals (USA and Canada)			(Note: 3)		EN
Combined ATEX Ex ia, Ex db and Ex ic			(Note: 3)		EW
IECEx Intrinsic Safety Ex ia					E8
IECEx Explosion Proof Ex db			(Note: 3)		E9
IECEx Intrinsic Safety Ex ic					ER
Combined IEC Approval Ex ia and Ex db			(Note: 3)		EH
Combined IEC Approval Ex ia, Ex db and Ex ic			(Note: 3)		EI
NEPSI Intrinsic Safety Ex ia					EY
NEPSI Explosion Proof Ex d			(Note: 3)		EZ
NEPSI Intrinsic Safety Ex ic					ES
Combined NEPSI Ex ia and Ex d			(Note: 3)		EP
Combined NEPSI Ex ia, Ex d and Ex ic			(Note: 3)		EQ

	XX	XX	XX	XX	XX	XX	XX
Other Explosion Protection Certifications							
TR CU EAC Ex ia Russia (incl. GOST Metrologic Approval)	W1						
TR CU EAC Ex d Russia (incl. GOST Metrologic Approval)	W2						
TR CU EAC Ex ia Kazakhstan (incl. GOST Metrologic Approval)	W3						
TR CU EAC Ex d Kazakhstan (incl. GOST Metrologic Approval)	W4						
TR CU EAC Ex ia Belarus (incl. GOST Metrologic Approval)	WF						
TR CU EAC Ex d Belarus (incl. GOST Metrologic Approval)	WG						
Integral LCD							
With integral LCD display		L1					
TTG (Through The Glass) integral digital LCD display		L5					
Mounting Bracket Shape / Material							
For pipe mounting / Carbon steel (Not suitable for AISI housing)			B1				
For pipe mounting / AISI 316 SST (1.4401) (Not suitable for AISI housing)			B2				
For wall mounting / Carbon steel (not suitable for AISI housing)			B3				
For wall mounting / AISI 316 SST (1.4401) (not suitable for AISI housing)			B4				
Flat type bracket / AISI 316 SST (1.4401) (Not suitable for AISI housing)			B5				
Operating Instruction Language							
German				M1			
English				M5			
Label and Tag Language							
German					T1		
Italian					T2		
Spanish					T3		
Franch					T4		
Additional Tag Plate							
Supplemental wired-on stainless steel plate (4 lines, 32 characters each)						I1	
Laser printing of tag on stainless steel plate						I2	
Stainless steel tag, certifikation and wire-on plates						I3	
Configuration							
Standard – Pressure = inH2O/ psi at 68 °F; Temperature = deg. F							N2
Standard – Pressure = inH2O/ psi at 39.2 °F; Temperature = deg. F							N3
Standard – Pressure = inH2O/ psi at 20 °C; Temperature = deg. C							N4
Standard – Pressure = inH2O/ psi at 4 °C; Temperature = deg. C							N5
Custom							N6

...Ordering information

...ADDITIONAL ORDERING INFORMATION for model 266CSH

Add one or more 2-digit code(s) after the basic ordering information to select all required options

	XX	XX	XX	XX	XX	XX
Preparation Procedure						
Oxygen service cleaning, Pmax = 12 MPa (120 bar, 1740 psi) or maximum working pressure (lower value), Tmax = 60 °C / 140 °F (only available with inert fill and Viton gasket)	P1					
Hydrogen service preparation (Fluid film)	P2					
Certificates						
Inspection certificate 3.1 acc. EN 10204 of calibration		C1				
Inspection certificate 3.1 acc. EN 10204 of the cleanliness stage		C3				
Inspection certificate 3.1 acc. EN 10204 of helium leakage test of the sensor module		C4				
Inspection certificate 3.1 acc. EN 10204 of pressure test		C5				
Declaration of compliance with the order 2.1 acc. EN 10204 for instrument design		C6				
Printed record of configured data of transmitter		CG				
PMI test on wetted parts		CT				
Approvals						
GOST Russia Metrologic Approval			Y1			
GOST Kazakhstan Metrologic Approval			Y2			
GOST Ukraine Metrologic Approval			Y3			
GOST Belarus Metrologic Approval			Y4			
Det Norske Veritas naval approval			YA			
Material Traceability						
Certificate of compliance with the order 2.1 acc. EN 10204 for process wetted parts				H1		
Inspection certificate 3.1 acc. EN 10204 of pressure-bearing and process wetted parts with analysis certificates as material (Note: 4)				H3		
Material certificate 2.2 acc. EN 10204 for the pressure bearing and process wetted parts				H4		
Connector						
With cable gland M20 x 1.5					U8	
Housing Accessories						
Integral mount manifold (price adder just for assembling, not for manifold)						A1

Note 1: Not available with Diaphragm Material code M, V, T, C, Y, D
Note 2: Suitable for Oxygen service
Note 3: Not available with Housing Material / Electrical Connection code J
Note 4: Minor Parts with Factory Certificate acc. to EN 10204

Standard delivery scope (changes possible with additional ordering code)

- Adapters supplied loose
- Sealing plugs for horizontal connection flanges on the process axis; not for PVDF Kynar insert or for vertical connection flanges (no vent / drain valves)
- For standard applications (without explosion protection)
- No display, no mounting bracket, no surge protector
- Multilanguage short operating instruction and English labeling
- Configuration with kPa and °C units
- No test, inspection, or material certificates

Ordering information

Basic ordering information model 266CST Multivariable transmitter for mass flow and level

Select one character or set of characters from each category and specify complete catalog number.

Refer to additional ordering information and specify one or more codes for each transmitter if additional options are required d.

Base model - 1st to 6th characters				**266CST**	**X**	**X**	**X**	**X**	**X**	**X**	**X**
Multivariable transmitter for mass flow and level base accuracy 0.04 %											
Sensor Span Limits – 7th character											
0.05 and 1 kPa	0.5 and 10 mbar	0.2 and 4 in. H_2O	(Note: 1)		A				continued on next page		
0.2 and 6 kPa	2 and 60 mbar	0.8 and 24 in. H_2O			C						
0.4 and 40 kPa	4 and 400 mbar	1.6 and 160 in. H_2O			F						
2.5 and 250 kPa	25 and 2500 mbar	10 and 1000 in. H_2O			L						
20 and 2000 kPa	0.2 and 20 bar	2.9 and 290 psi			N						
Maximum Working Pressure – 8th character											
0 and 0.6 MPa	0 and 6 bar	0 and 87 psi	(only with Sensor Span Limits code A)			1					
0 and 2 MPa	0 and 20 bar	0 and 290 psi				2					
0 and 10 MPa	0 and 100 bar	0 and 1450 psi	(not with Sensor Span Limits code A)			3					
0 and 41 MPa	0 and 410 bar	0 and 5945 psi	(not with Sensor Span Limits code A)			4					
Diaphragm Material / Fill Fluid – 9th character											
AISI 316L SST (1.4435)		Silicone oil					NACE	S			
Hastelloy® C-276		Silicone oil					NACE	K			
Monel 400®		Silicone oil					NACE	M			
Monel 400® gold-plated		Silicone oil					NACE	V			
Tantalum		Silicone oil					NACE	T			
AISI 316L SST (1.4435)		Inert fluid – Galden (Suitable for oxygen applications)	(Note: 2)				NACE	A			
Hastelloy® C-276		Inert fluid – Galden (Suitable for oxygen applications)	(Note: 2)				NACE	F			
Monel 400®		Inert fluid – Galden (Suitable for oxygen applications)	(Note: 2)				NACE	C			
Monel 400® gold-plated		Inert fluid – Galden (Suitable for oxygen applications)	(Note: 2)				NACE	Y			
Tantalum		Inert fluid – Galden (Suitable for oxygen applications)	(Note: 2)				NACE	D			
Process Flanges and Adapters Material / Connection – 10th character											
AISI 316L SST (1.4404 / 1.4408)		1/4-18 NPT female direct		(horizontal connection)			NACE		A		
AISI 316L SST (1.4404 / 1.4408)		1/2-14 NPT female through adapter		(horizontal connection)			NACE		B		
AISI 316L SST (1.4404 / 1.4408)		1/4-18 NPT female direct (DIN 19213)		(horizontal connection)			NACE		C		
Hastelloy® C-276		1/4-18 NPT female direct		(horizontal connection)			NACE		D		
Hastelloy® C-276		1/2-14 NPT female through adapter		(horizontal connection)			NACE		E		
Monel 400®		1/4-18 NPT female direct		(horizontal connection)			NACE		G		
Monel 400®		1/2-14 NPT female through adapter		(horizontal connection)			NACE		H		
Kynar (PVDF)		1/4-18 NPT female direct (MWP= 1 MPa/10 bar/ 145 psi)		(insert on side or flange)					P		
AISI 316L SST (1.4404 / 1.4408)		1/4-18 NPT female direct		(vertical connection)			NACE		Q		

.

...Ordering information

...Basic ordering information model 266CST Multivariable transmitter for mass flow and level

Select one character or set of characters from each category and specify complete catalog number.
Refer to additional ordering information and specify one or more codes for each transmitter if additional options are required.

			X	X	X
Bolts Material / Gaskets Material – 11th character					
AISI 316L SST (NACE - non exposed to H2S) / Viton (Suitable for oxygen applications)		(Note: 1)	3		
AISI 316L SST (NACE - non exposed to H2S) / PTFE (Max. 25 MPa / 250 bar / 3625 psi)			4		
AISI 316L SST (NACE - non exposed to H2S) / EPDM			5		
AISI 316L SST (NACE - non exposed to H2S) / Perbunan			6		
AISI 316L SST (NACE - non exposed to H2S) / Graphite			7		
AISI 316L SST (NACE - non exposed) / FEP (only available with Kynar [PVDF] process connection)			T		
Housing Material / Electrical Connection – 12th character					
Aluminium alloy (Barrel type)	1/2-14 NPT			A	
Aluminium alloy (Barrel type)	M20 x 1.5			B	
AISI 316L SST (Barrel type)	1/2-14 NPT			S	
AISI 316L SST (Barrel type)	M20 x 1.5			T	
Aluminium alloy (DIN type)	M20 x 1.5			J	
Output – 13th character					
HART digital communication and 4 … 20 mA		(No additional options)			H
HART digital communication and 4 … 20 mA		(Options requested by "Additional ordering code")			1

ADDITIONAL ORDERING INFORMATION for model 266CST

Add one or more 2-digit code(s) after the basic ordering information to select all required options

				XX	XX
Vent and drain valve Material / Position					
AISI 316L SST (1.4404)	On process axis	NACE		V1	
AISI 316L SST (1.4404)	On flanges side top	NACE		V2	
AISI 316L SST (1.4404)	On flanges side bottom	NACE		V3	
Hastelloy® C-276	On process axis	NACE		V4	
Hastelloy® C-276	On flanges side top	NACE		V5	
Hastelloy® C-276	On flanges side bottom	NACE		V6	
Monel 400®	On process axis	NACE		V7	
Monel 400®	On flanges side top	NACE		V8	
Monel 400®	On flanges side bottom	NACE		V9	
Explosion Protection Certification					
ATEX Intrinsic Safety Ex ia					E1
ATEX Explosion Proof Ex db			(Note: 3)		E2
ATEX Intrinsic Safety Ex ic					E3
FM approval (Canada) (Only available with 1/2-14 NPT or M20 electrical connections)			(Note: 3)		E4
FM approval (USA) (Only available with 1/2-14 NPT or M20 electrical connections)			(Note: 3)		E6
FM approvals (USA and Canada) Intrinsic Safety					EA
FM approvals (USA and Canada) Explosion Proof			(Note: 3)		EB
FM approvals (USA and Canada) Nonincendive					EC
Combined ATEX, IECEx and FM approvals (USA and Canada)			(Note: 3)		EN
Combined ATEX Ex ia, Ex db and Ex ic			(Note: 3)		EW
IECEx Intrinsic Safety Ex ia					E8
IECEx Explosion Proof Ex db			(Note: 3)		E9
IECEx Intrinsic Safety Ex ic					ER
Combined IEC Approval Ex ia and Ex db			(Note: 3)		EH
Combined IEC Approval Ex ia, Ex db and Ex ic			(Note: 3)		EI
NEPSI Intrinsic Safety Ex ia					EY
NEPSI Explosion Proof Ex d			(Note: 3)		EZ
NEPSI Intrinsic Safety Ex ic					ES
Combined NEPSI Ex ia and Ex d			(Note: 3)		EP
Combined NEPSI Ex ia, Ex d and Ex ic			(Note: 3)		EQ

...Ordering information

...ADDITIONAL ORDERING INFORMATION for model 266CST

...Add one or more 2-digit code(s) after the basic ordering information to select all required options

	XX	XX	XX	XX	XX	XX	XX
Other Explosion Protection Certifications							
TR CU EAC Ex ia Russia (incl. GOST Metrologic Approval)	W1						
TR CU EAC Ex d Russia (incl. GOST Metrologic Approval)	W2						
TR CU EAC Ex ia Kazakhstan (incl. GOST Metrologic Approval)	W3						
TR CU EAC Ex d Kazakhstan (incl. GOST Metrologic Approval)	W4						
TR CU EAC Ex ia Belarus (incl. GOST Metrologic Approval)	WF						
TR CU EAC Ex d Belarus (incl. GOST Metrologic Approval)	WG						
Integral LCD							
With integral LCD display		L1					
TTG (Through The Glass) integral digital LCD display		L5					
Mounting Bracket Shape / Material							
For pipe mounting / Carbon steel (Not suitable for AISI housing)			B1				
For pipe mounting / AISI 316 SST (1.4401) (Not suitable for AISI housing)			B2				
For wall mounting / Carbon steel (not suitable for AISI housing)			B3				
For wall mounting / AISI 316 SST (1.4401) (not suitable for AISI housing)			B4				
Flat type bracket / AISI 316 SST (1.4401) (Not suitable for AISI housing)			B5				
Operating Instruction Language							
German				M1			
English				M5			
Label and Tag Language							
German					T1		
Italian					T2		
Spanish					T3		
Franch					T4		
Additional Tag Plate							
Supplemental wired-on stainless steel plate (4 lines, 32 characters each)						I1	
Laser printing of tag on stainless steel plate						I2	
Stainless steel tag, certifikation and wire-on plates						I3	
Configuration							
Standard – Pressure = inH2O/ psi at 68 °F; Temperature = deg. F							N2
Standard – Pressure = inH2O/ psi at 39.2 °F; Temperature = deg. F							N3
Standard – Pressure = inH2O/ psi at 20 °C; Temperature = deg. C							N4
Standard – Pressure = inH2O/ psi at 4 °C; Temperature = deg. C							N5
Custom							N6

	XX	XX	XX	XX	XX	XX
Preparation Procedure						
Oxygen service cleaning, Pmax = 12 MPa (120 bar, 1740 psi) or maximum working pressure (lower value), Tmax = 60 °C / 140 °F (only available with inert fill and Viton gasket)	P1					
Hydrogen service preparation (Fluid film)	P2					
Certificates						
Inspection certificate 3.1 acc. EN 10204 of calibration		C1				
Inspection certificate 3.1 acc. EN 10204 of the cleanliness stage		C3				
Inspection certificate 3.1 acc. EN 10204 of helium leakage test of the sensor module		C4				
Inspection certificate 3.1 acc. EN 10204 of pressure test		C5				
Declaration of compliance with the order 2.1 acc. EN 10204 for instrument design		C6				
Printed record of configured data of transmitter		CG				
PMI test on wetted parts		CT				
PMI test on wetted parts		CT				
Approvals						
GOST Russia Metrologic Approval			Y1			
GOST Kazakhstan Metrologic Approval			Y2			
GOST Ukraine Metrologic Approval			Y3			
GOST Belarus Metrologic Approval			Y4			
Det Norske Veritas naval approval			YA			
Material Traceability						
Certificate of compliance with the order 2.1 acc. EN 10204 for process wetted parts				H1		
Inspection certificate 3.1 acc. EN 10204 of pressure-bearing and process wetted parts with analysis certificates as material (Note: 4)				H3		
Material certificate 2.2 acc. EN 10204 for the pressure bearing and process wetted parts				H4		
Connector						
With cable gland M20 x 1.5					U8	
Seal Type High / Low Pressure Side						
For ordering information please refer to seal data sheet DS/S26						

Note 1: Not available with Diaphragm Material code M, V, T, C, Y, D
Note 2: Suitable for Oxygen service
Note 3: Not available with Housing Material / Electrical Connection code J
Note 4: Minor Parts with Factory Certificate acc. to EN 10204

Standard delivery scope (changes possible with additional ordering code)

- Adapters supplied loose
- Sealing plugs for horizontal connection flanges on the process axis; not for PVDF Kynar insert or for vertical connection flanges (no vent / drain valves)
- For standard applications (without explosion protection)
- No display, no mounting bracket, no surge protector
- Multilanguage short operating instruction and English labeling
- Configuration with kPa and °C units
- No test, inspection, or material certificates

Ordering information

Basic ordering information model 266JSH Multivariable transmitter, for differential pressure, absolute pressure and temperature measurement.

Select one character or set of characters from each category and specify complete catalog number.

Refer to additional ordering information and specify one or more codes for each transmitter if additional options are required.

Base model - 1st to 6th characters				**266JSH**	**X**	**X**	**X**	**X**	**X**	**X**	**X**
Multivariable transmitter, for differential pressure, absolute pressure and temperature measurement, base accuracy 0.075 %											
Sensor Span Limits – 7th character											
0.05 and 1 kPa	0.5 and 10 mbar	0.2 and 4 in. H_2O	(Note: 1)		A						
0.2 and 6 kPa	2 and 60 mbar	0.8 and 24 in. H_2O			C						
0.4 and 40 kPa	4 and 400 mbar	1.6 and 160 in. H_2O			F						
2.5 and 250 kPa	25 and 2500 mbar	10 and 1000 in. H_2O			L						
20 and 2000 kPa	0.2 and 20 bar	2.9 and 290 psi			N						
100 and 10000 kPa	1 and 100 bar	14.5 and 1450 psi			R						
Maximum Working Pressure – 8th character											
0 and 0.6 MPa	0 and 6 bar	0 and 87 psi	(only with Sensor Span Limits code A)			1					
0 and 2 MPa	0 and 20 bar	0 and 290 psi				2					
0 and 10 MPa	0 and 100 bar	0 and 1450 psi	(not with Sensor Span Limits code A)			3					
0 and 41 MPa	0 and 410 bar	0 and 5945 psi	(not with Sensor Span Limits code A)			4					
Diaphragm Material / Fill Fluid – 9th character											
AISI 316L SST (1.4435)		Silicone oil					NACE	S			
Hastelloy® C-276		Silicone oil					NACE	K			
Monel 400®		Silicone oil					NACE	M			
Monel 400® gold-plated		Silicone oil					NACE	V			
Tantalum		Silicone oil					NACE	T			
AISI 316L SST (1.4435)		Inert fluid – Galden (Suitable for oxygen applications)	(Note: 2)				NACE	A			
Hastelloy® C-276		Inert fluid – Galden (Suitable for oxygen applications)	(Note: 2)				NACE	F			
Monel 400®		Inert fluid – Galden (Suitable for oxygen applications)	(Note: 2)				NACE	C			
Monel 400® gold-plated		Inert fluid – Galden (Suitable for oxygen applications)	(Note: 2)				NACE	Y			
Tantalum		Inert fluid – Galden (Suitable for oxygen applications)	(Note: 2)				NACE	D			
Process Flanges and Adapters Material / Connection – 10th character											
AISI 316L SST (1.4404 / 1.4408)		1/4-18 NPT female direct		(horizontal connection)			NACE		A		
AISI 316L SST (1.4404 / 1.4408)		1/2-14 NPT female through adapter		(horizontal connection)			NACE		B		
AISI 316L SST (1.4404 / 1.4408)		1/4-18 NPT female direct (DIN 19213)		(horizontal connection)			NACE		C		
Hastelloy® C-276		1/4-18 NPT female direct		(horizontal connection)			NACE		D		
Hastelloy® C-276		1/2-14 NPT female through adapter		(horizontal connection)			NACE		E		
Monel 400®		1/4-18 NPT female direct		(horizontal connection)			NACE		G		
Monel 400®		1/2-14 NPT female through adapter		(horizontal connection)			NACE		H		
Kynar (PVDF)		1/4-18 NPT female direct (MWP= 1 MPa/10 bar/ 145 psi)		(insert on side or flange)					P		
AISI 316L SST (1.4404 / 1.4408)		1/4-18 NPT female direct		(vertical connection)			NACE		Q		

continued on next page

			X	X	X
Bolts Material / Gaskets Material – 11th character					
AISI 316L SST (NACE - non exposed to H2S) / Viton (Suitable for oxygen applications)		(Note: 2)	3		
AISI 316L SST (NACE - non exposed to H2S) / PTFE (Max. 25 MPa / 250 bar / 3625 psi)			4		
AISI 316L SST (NACE - non exposed to H2S) / EPDM			5		
AISI 316L SST (NACE - non exposed to H2S) / Perbunan			6		
AISI 316L SST (NACE - non exposed to H2S) / Graphite			7		
AISI 316L SST (NACE - non exposed) / FEP (only available with Kynar [PVDF] process connection)			T		
Housing Material / Electrical Connection – 12th character					
Aluminium alloy (Barrel type)	1/2-14 NPT			A	
Aluminium alloy (Barrel type)	M20 x 1.5			B	
AISI 316L SST (Barrel type)	1/2-14 NPT			S	
AISI 316L SST (Barrel type)	M20 x 1.5			T	
Aluminium alloy (DIN type)	M20 x 1.5			J	
Output – 13th character					
HART digital communication and 4 … 20 mA		(No additional options)			H
HART digital communication and 4 … 20 mA		(Options requested by "Additional ordering code")			1

...Ordering information

...ADDITIONAL ORDERING INFORMATION for model 266JSH

Add one or more 2-digit code(s) after the basic ordering information to select all required options

				XX	XX
Vent and drain valve Material / Position					
AISI 316L SST (1.4404)	On process axis	NACE		V1	
AISI 316L SST (1.4404)	On flanges side top	NACE		V2	
AISI 316L SST (1.4404)	On flanges side bottom	NACE		V3	
Hastelloy® C-276	On process axis	NACE		V4	
Hastelloy® C-276	On flanges side top	NACE		V5	
Hastelloy® C-276	On flanges side bottom	NACE		V6	
Monel 400®	On process axis	NACE		V7	
Monel 400®	On flanges side top	NACE		V8	
Monel 400®	On flanges side bottom	NACE		V9	
Explosion Protection Certification					
ATEX Intrinsic Safety Ex ia					E1
ATEX Explosion Proof Ex db			(Note: 3)		E2
ATEX Intrinsic Safety Ex ic					E3
FM approval (Canada) (Only available with 1/2-14 NPT or M20 electrical connections)			(Note: 3)		E4
FM approval (USA) (Only available with 1/2-14 NPT or M20 electrical connections)			(Note: 3)		E6
FM approvals (USA and Canada) Intrinsic Safety					EA
FM approvals (USA and Canada) Explosion Proof			(Note: 3)		EB
FM approvals (USA and Canada) Nonincendive					EC
Combined ATEX, IECEx and FM approvals (USA and Canada)			(Note: 3)		EN
Combined ATEX Ex ia, Ex db and Ex ic			(Note: 3)		EW
IECEx Intrinsic Safety Ex ia					E8
IECEx Explosion Proof Ex db			(Note: 3)		E9
IECEx Intrinsic Safety Ex ic					ER
Combined IEC Approval Ex ia and Ex db			(Note: 3)		EH
Combined IEC Approval Ex ia, Ex db and Ex ic			(Note: 3)		EI
NEPSI Intrinsic Safety Ex ia					EY
NEPSI Explosion Proof Ex d			(Note: 3)		EZ
NEPSI Intrinsic Safety Ex ic					ES
Combined NEPSI Ex ia and Ex d			(Note: 3)		EP
Combined NEPSI Ex ia, Ex d and Ex ic			(Note: 3)		EQ

	XX	XX	XX	XX	XX	XX	XX
Other Explosion Protection Certifications							
TR CU EAC Ex ia Russia (incl. GOST Metrologic Approval)	W1						
TR CU EAC Ex d Russia (incl. GOST Metrologic Approval)	W2						
TR CU EAC Ex ia Kazakhstan (incl. GOST Metrologic Approval)	W3						
TR CU EAC Ex d Kazakhstan (incl. GOST Metrologic Approval)	W4						
TR CU EAC Ex ia Belarus (incl. GOST Metrologic Approval)	WF						
TR CU EAC Ex d Belarus (incl. GOST Metrologic Approval)	WG						
Integral LCD							
With integral LCD display		L1					
TTG (Through The Glass) integral digital LCD display		L5					
Mounting Bracket Shape / Material							
For pipe mounting / Carbon steel (Not suitable for AISI housing)			B1				
For pipe mounting / AISI 316 SST (1.4401) (Not suitable for AISI housing)			B2				
For wall mounting / Carbon steel (not suitable for AISI housing)			B3				
For wall mounting / AISI 316 SST (1.4401) (not suitable for AISI housing)			B4				
Flat type bracket / AISI 316 SST (1.4401) (Not suitable for AISI housing)			B5				
Operating Instruction Language							
German				M1			
English				M5			
Label and Tag Language							
German					T1		
Italian					T2		
Spanish					T3		
Franch					T4		
Additional Tag Plate							
Supplemental wired-on stainless steel plate (4 lines, 32 characters each)						I1	
Laser printing of tag on stainless steel plate						I2	
Stainless steel tag, certifikation and wire-on plates						I3	
Configuration							
Standard – Pressure = inH2O/ psi at 68 °F; Temperature = deg. F							N2
Standard – Pressure = inH2O/ psi at 39.2 °F; Temperature = deg. F							N3
Standard – Pressure = inH2O/ psi at 20 °C; Temperature = deg. C							N4
Standard – Pressure = inH2O/ psi at 4 °C; Temperature = deg. C							N5
Custom							N6

...Ordering information

...ADDITIONAL ORDERING INFORMATION for model 266JSH

Add one or more 2-digit code(s) after the basic ordering information to select all required options

	XX	XX	XX	XX	XX	XX
Preparation Procedure						
Oxygen service cleaning, Pmax = 12 MPa (120 bar, 1740 psi) or maximum working pressure (lower value), Tmax = 60 °C / 140 °F (only available with inert fill and Viton gasket)	P1					
Hydrogen service preparation (Fluid film)	P2					
Certificates						
Inspection certificate 3.1 acc. EN 10204 of calibration		C1				
Inspection certificate 3.1 acc. EN 10204 of the cleanliness stage		C3				
Inspection certificate 3.1 acc. EN 10204 of helium leakage test of the sensor module		C4				
Inspection certificate 3.1 acc. EN 10204 of pressure test		C5				
Declaration of compliance with the order 2.1 acc. EN 10204 for instrument design		C6				
Printed record of configured data of transmitter		CG				
PMI test on wetted parts		CT				
Approvals						
GOST Russia Metrologic Approval			Y1			
GOST Kazakhstan Metrologic Approval			Y2			
GOST Ukraine Metrologic Approval			Y3			
GOST Belarus Metrologic Approval			Y4			
Det Norske Veritas naval approval			YA			
Material Traceability						
Certificate of compliance with the order 2.1 acc. EN 10204 for process wetted parts				H1		
Inspection certificate 3.1 acc. EN 10204 of pressure-bearing and process wetted parts with analysis certificates as material (Note: 4)				H3		
Material certificate 2.2 acc. EN 10204 for the pressure bearing and process wetted parts				H4		
Connector						
With cable gland M20 x 1.5					U8	
Housing Accessories						
Integral mount manifold (price adder just for assembling, not for manifold)						A1

Note 1: Not available with Diaphragm Material code M, V, T, C, Y, D
Note 2: Suitable for Oxygen service
Note 3: Not available with Housing Material / Electrical Connection code J
Note 4: Minor Parts with Factory Certificate acc. to EN 10204

Standard delivery scope (changes possible with additional ordering code)

- Adapters supplied loose
- Sealing plugs for horizontal connection flanges on the process axis; not for PVDF Kynar insert or for vertical connection flanges (no vent / drain valves)
- For standard applications (without explosion protection)
- No display, no mounting bracket, no surge protector
- Multilanguage short operating instruction and English labeling
- Configuration with kPa and °C units
- No test, inspection, or material certificates

Ordering information

Basic ordering information model 266JST Multivariable transmitter, for differential pressure, absolute pressure and temperature measurement

Select one character or set of characters from each category and specify complete catalog number.

Refer to additional ordering information and specify one or more codes for each transmitter if additional options are required.

Base model - 1st to 6th characters				**2 6 6 J S T**	**X**	**X**	**X**	**X**	**X**	**X**	**X**
Multivariable transmitter, for differential pressure, absolute pressure and measurement, base accuracy 0.04 %											
Sensor Span Limits – 7th character											
0.6 and 6 kPa	6 and 60 mbar	2.41 and 24 in. H_2O			C						
0.67 and 40 kPa	6.7 and 400 mbar	2.67 and 160 in. H_2O			F						
4.17 and 250 kPa	41.7 and 2500 mbar	16.7 and 1000 in. H_2O			L						
33.3 and 2000 kPa	0.333 and 20 bar	4.83 and 290 psi			N						
Maximum Working Pressure – 8th character											
0 and 2 MPa	0 and 20 bar	0 and 290 psi				2					
0 and 10 MPa	0 and 100 bar	0 and 1450 psi	(not with Sensor Span Limits code A)			3					
0 and 41 MPa	0 and 410 bar	0 and 5945 psi	(not with Sensor Span Limits code A)			4					
Diaphragm Material / Fill Fluid – 9th character											
AISI 316L SST (1.4435)	Silicone oil				NACE		S				
Hastelloy® C-276	Silicone oil				NACE		K				
Monel 400®	Silicone oil				NACE		M				
AISI 316 L ss gold plated	Silicone oil				NACE		V				
Tantalum	Silicone oil				NACE		T				
AISI 316L SST (1.4435)	Inert fluid – Galden (Suitable for oxygen applications)			(Note: 1)	NACE		A				
Hastelloy® C-276	Inert fluid – Galden (Suitable for oxygen applications)			(Note: 1)	NACE		F				
Monel 400® gold-plated	Inert fluid – Galden (Suitable for oxygen applications)			(Note: 1)	NACE		C				
AISI 316 L ss gold plated	Inert fluid – Galden (Suitable for oxygen applications)			(Note: 1)	NACE		Y				
Tantalum	Inert fluid – Galden (Suitable for oxygen applications)			(Note: 1)	NACE		D				
Diaphragm seal	Silicone oil (Seal to be quoted separately)						R				
Diaphragm seal	Inert fluid – Galden (Seal to be quoted separately)						2				
Process Flanges and Adapters Material / Connection – 10th character											
AISI 316L SST (1.4404 / 1.4408)	1/4-18 NPT female direct		(horizontal connection)		NACE			A			
AISI 316L SST (1.4404 / 1.4408)	1/2-14 NPT female through adapter		(horizontal connection)		NACE			B			
AISI 316L SST (1.4404 / 1.4408)	1/4-18 NPT female direct (DIN 19213)		(horizontal connection)		NACE			C			
Hastelloy® C-276	1/4-18 NPT female direct		(horizontal connection)		NACE			D			
Hastelloy® C-276	1/2-14 NPT female through adapter		(horizontal connection)		NACE			E			
Monel 400®	1/4-18 NPT female direct		(horizontal connection)		NACE			G			
Monel 400®	1/2-14 NPT female through adapter		(horizontal connection)		NACE			H			
AISI 316L SST (1.4404 / 1.4408)	For two seals construction				NACE			R			

continued on next page

...Ordering information

...Basic ordering information model 266JST Multivariable transmitter with remote seal(s), for mass flow and level

Select one character or set of characters from each category and specify complete catalog number.
Refer to additional ordering information and specify one or more codes for each transmitter if additional options are required.

			X	X	X
Bolts Material / Gaskets Material – 11th character					
AISI 316L SST (NACE - non exposed to H2S) / Viton (Suitable for oxygen applications)		(Note: 1)	3		
AISI 316L SST (NACE - non exposed to H2S) / PTFE (Max. 25 MPa / 250 bar / 3625 psi)			4		
AISI 316L SST (NACE - non exposed to H2S) / EPDM			5		
AISI 316L SST (NACE - non exposed to H2S) / Perbunan			6		
AISI 316L SST (NACE - non exposed to H2S) / Graphite			7		
AISI 316L SST (NACE - non exposed to H2S) / Without gaskets (For two seals construction)			R		
Housing Material / Electrical Connection – 12th character					
Aluminium alloy (Barrel type)	1/2-14 NPT			A	
Aluminium alloy (Barrel type)	M20 x 1.5			B	
AISI 316L SST (Barrel type)	1/2-14 NPT			S	
AISI 316L SST (Barrel type)	M20 x 1.5			T	
Aluminium alloy (DIN type)	M20 x 1.5			J	
Output – 13th character					
HART digital communication and 4 … 20 mA		(No additional options)			H
HART digital communication and 4 … 20 mA		(Options requested by "Additional ordering code")			1

ADDITIONAL ORDERING INFORMATION for model 266JST

Add one or more 2-digit code(s) after the basic ordering information to select all required options

				XX	XX
Vent and drain valve Material / Position					
AISI 316L SST (1.4404)	On process axis	NACE		V1	
AISI 316L SST (1.4404)	On flanges side top	NACE		V2	
AISI 316L SST (1.4404)	On flanges side bottom	NACE		V3	
Hastelloy® C-276	On process axis	NACE		V4	
Hastelloy® C-276	On flanges side top	NACE		V5	
Hastelloy® C-276	On flanges side bottom	NACE		V6	
Monel 400®	On process axis	NACE		V7	
Monel 400®	On flanges side top	NACE		V8	
Monel 400®	On flanges side bottom	NACE		V9	
Explosion Protection Certification					
ATEX Intrinsic Safety Ex ia					E1
ATEX Explosion Proof Ex db			(Note: 2)		E2
ATEX Intrinsic Safety Ex ic					E3
FM approval (Canada) (Only available with 1/2-14 NPT or M20 electrical connections)			(Note: 2)		E4
FM approval (USA) (Only available with 1/2-14 NPT or M20 electrical connections)			(Note: 2)		E6
FM approvals (USA and Canada) Intrinsic Safety					EA
FM approvals (USA and Canada) Explosion Proof			(Note: 2)		EB
FM approvals (USA and Canada) Nonincendive					EC
Combined ATEX, IECEx and FM approvals (USA and Canada)			(Note: 2)		EN
Combined ATEX Ex ia, Ex db and Ex ic			(Note: 2)		EW
IECEx Intrinsic Safety Ex ia					E8
IECEx Explosion Proof Ex db			(Note: 2)		E9
IECEx Intrinsic Safety Ex ic					ER
Combined IEC Approval Ex ia and Ex db			(Note: 2)		EH
Combined IEC Approval Ex ia, Ex db and Ex ic			(Note: 2)		EI
NEPSI Intrinsic Safety Ex ia					EY
NEPSI Explosion Proof Ex d			(Note: 2)		EZ
NEPSI Intrinsic Safety Ex ic					ES
Combined NEPSI Ex ia and Ex d			(Note: 2)		EP
Combined NEPSI Ex ia, Ex d and Ex ic			(Note: 2)		EQ

...Ordering information

...ADDITIONAL ORDERING INFORMATION for model 266JST

...Add one or more 2-digit code(s) after the basic ordering information to select all required options

	XX	XX	XX	XX	XX	XX	XX
Other Explosion Protection Certifications							
TR CU EAC Ex ia Russia (incl. GOST Metrologic Approval)	W1						
TR CU EAC Ex d Russia (incl. GOST Metrologic Approval)	W2						
TR CU EAC Ex ia Kazakhstan (incl. GOST Metrologic Approval)	W3						
TR CU EAC Ex d Kazakhstan (incl. GOST Metrologic Approval)	W4						
TR CU EAC Ex ia Belarus (incl. GOST Metrologic Approval)	WF						
TR CU EAC Ex d Belarus (incl. GOST Metrologic Approval)	WG						
Integral LCD							
With integral LCD display		L1					
TTG (Through The Glass) integral digital LCD display		L5					
Mounting Bracket Shape / Material							
For pipe mounting / Carbon steel (Not suitable for AISI housing)			B1				
For pipe mounting / AISI 316 SST (1.4401) (Not suitable for AISI housing)			B2				
For wall mounting / Carbon steel (not suitable for AISI housing)			B3				
For wall mounting / AISI 316 SST (1.4401) (not suitable for AISI housing)			B4				
Flat type bracket / AISI 316 SST (1.4401) (Not suitable for AISI housing)			B5				
Operating Instruction Language							
German				M1			
English				M5			
Label and Tag Language							
German					T1		
Italian					T2		
Spanish					T3		
Franch					T4		
Additional Tag Plate							
Supplemental wired-on stainless steel plate (4 lines, 32 characters each)						I1	
Laser printing of tag on stainless steel plate						I2	
Stainless steel tag, certifikation and wire-on plates						I3	
Configuration							
Standard – Pressure = inH2O/ psi at 68 °F; Temperature = deg. F							N2
Standard – Pressure = inH2O/ psi at 39.2 °F; Temperature = deg. F							N3
Standard – Pressure = inH2O/ psi at 20 °C; Temperature = deg. C							N4
Standard – Pressure = inH2O/ psi at 4 °C; Temperature = deg. C							N5
Custom							N6

		XX	XX	XX	XX	XX
Certificates						
Inspection certificate 3.1 acc. EN 10204 of calibration		C1				
Inspection certificate 3.1 acc. EN 10204 of the cleanliness stage		C3				
Inspection certificate 3.1 acc. EN 10204 of helium leakage test of the sensor module		C4				
Inspection certificate 3.1 acc. EN 10204 of pressure test		C5				
Declaration of compliance with the order 2.1 acc. EN 10204 for instrument design		C6				
Printed record of configured data of transmitter		CG				
PMI test on wetted parts		CT				
Approvals						
GOST Russia Metrologic Approval			Y1			
GOST Kazakhstan Metrologic Approval			Y2			
GOST Ukraine Metrologic Approval			Y3			
GOST Belarus Metrologic Approval			Y4			
Det Norske Veritas naval approval			YA			
Material Traceability						
Certificate of compliance with the order 2.1 acc. EN 10204 for process wetted parts				H1		
Inspection certificate 3.1 acc. EN 10204 of pressure-bearing and process wetted parts						
with analysis certificates as material	(Note: 4)			H3		
Material certificate 2.2 acc. EN 10204 for the pressure bearing and process wetted parts				H4		
Connector						
With cable gland M20 x 1.5					U8	
Housing Accessories						
Integral mount manifold (price adder just for assembling, not for manifold)						A1

Note 1: Not available with Diaphragm Material code M, V, T, C, Y, D
Note 2: Suitable for Oxygen service
Note 3: Not available with Housing Material / Electrical Connection code J
Note 4: Minor Parts with Factory Certificate acc. to EN 10204

Standard delivery scope (changes possible with additional ordering code)

- Adapters supplied loose
- Sealing plugs for horizontal connection flanges on the process axis; not for PVDF Kynar insert or for vertical connection flanges (no vent / drain valves)
- For standard applications (without explosion protection)
- No display, no mounting bracket, no surge protector
- Multilanguage short operating instruction and English labeling
- Configuration with kPa and °C units
- No test, inspection, or material certificates

IMPORTANT REMARK FOR ALL MODELS

The selection of suitable wetted parts and filling fluid for compatibility with the process media is a customers responsibility, if not otherwise notified before manufacturing.

NACE compliance information

1 The materials of constructions comply with metallurgical recommendations of NACE MR0175/ISO 15156 for sour oil field production environments. As specific environmental limits may apply to certain materials, please consult latest standard for further details. Materials AISI 316 / AISI 316L, Hastelloy C-276, Monel 400 also conform to NACE MR0103 for sour refining environments.

2 NACE MR0175 addresses bolting requirements in two classes:

- **Exposed bolts**: bolts directly exposed to the sour environment or buried, encapsulated or anyway not exposed to atmosphere
- **Non exposed bolts**: the bolting must not be directly exposed to sour environments, and must be directly exposed to the atmosphere at all times.

266CSH, 266CST, 266JSH, 266JST bolting identified by “NACE” are in compliance to the requirements of NACE MR0175 when considered “non exposed bolting”.

Trademarks

™ Hastelloy C-276 is a Cabot Corporation trademark
™ Hastelloy C-2000 is a Haynes International trademark
™ Monel is an International Nickel Co. trademark
™ Viton is a DuPont de Nemours trademark
™ DC200 is a Dow Corning Corporation trademark
™ DC704 is a Dow Corning Corporation trademark
™ Galden is a Montefluos trademark
™ Halocarbon is a Halocarbon Products Co. trademark
™ Neobee M 20 is a Stepan Company trademark
™ Esso Marcol 122 is an Esso Italiana trademark
™ Syltherm is a Dow Chemical Company trademark

Castel Maggiore (BO) 40013
Via Lirone 60/i

e-mail: info@eurotecsrl.com
Tel: +39 051/6321595
Website: www.eurotecsrl.com

C.F.: 04103780377
P.I.: 01596581205

—

ABB Ltd.
Measurement & Analytics
Howard Road St. Neots
Cambridgeshire PE19 8EU
UK
Tel: +44 (0)1480 475321
Fax: +44 (0)1480 217948

ABB Inc.
Measurement & Analytics
125 E. County Line Road
Warminster PA 18974
USA
Tel: +1 215 674 6000
Fax: +1 215 674 7183

abb.com/measurement

ABB S.p.A.
Measurement & Analytics
Via Luigi Vaccani 4
22016 Tremezzina Loc. Ossuccio (CO)
Italy
Tel: +39 0344 58111

ABB Automation Products GmbH
Measurement & Analytics
Schillerstr. 72
32425 Minden
Germany
Tel: +49 551 905 534
Fax: +49 551 905 555

We reserve the right to make technical changes or modify the contents of this document without prior notice. With regard to purchase orders, the agreed particulars shall prevail.
ABB does not accept any responsibility whatsoever for potential errors or possible lack of information in this document.

We reserve all rights in this document and in the subject matter and illustrations contained therein.
Any reproduction, disclosure to third parties or utilization of its contents – in whole or in parts – is forbidden without prior written consent of ABB.

© Copyright 2018 ABB
All rights reserved

3KXP400004R1001

DS/266CSX/JSX-EN REV. B 11.2018