ABB MEASUREMENT & ANALYTICS | DATA SHEET

266CSH / CST

Multivariable pressure transmitter with Modbus® communication

Measurement made easy

Pressure transmitters – 2600T series. Technical solutions for any application

Base accuracy
- 0.075 % of calibrated span (266CSH)
- 0.04 % of calibrated span (266CST)

266CSH/CST mass flow measurement with compensation, level measurement with compensation for gases, steam, and liquids
- Dynamic compensation of pressure and temperature changes

Proven sensor technology together with state-of-the-art digital technology
- Large turn down ratio of up to 100:1

Flexible configuration options
- Local configuration via buttons on LCD indicator
- TTG (Through-The-Glass) keypad technology

10-year stability
- 0.15 % of URL

Comprehensive range of functions
- Integrated counting function

Introduction

266CSH / 266CST

Thanks to their multisensor technology, these transmitters are capable of measuring three separate process variables at the same time and offer the option of calculating the following values:

- Mass flow for gases, steam, and liquids by means of dynamic compensation
- Standard volume flow for gases by means of dynamic compensation
- Heat flow for water and steam
- Drum water level and level measurement with density compensation of liquids

The differential pressure and absolute pressure are measured by two integrated sensors. The process temperature is measured by an external standard Pt100 resistance thermometer.

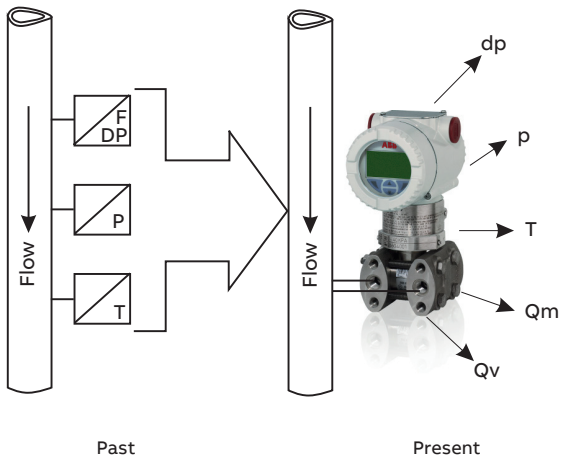

Figure 1: Flow measurement - past and present

Flow calculation

The flow calculation carried out by these transmitters includes compensation of pressure and / or temperature as well as more complex variables such as discharge coefficient, thermal expansion, Reynolds number, and compressibility factor.

The 266CXX pressure transmitters include flow equations for superheated steam, saturated steam, gases, and liquids - so you only need one device for your system.

Multivariable transmitters represent a more economical solution than the designs that have been used for this type of measuring point up to now, in which three different transmitters for differential pressure, absolute pressure, and temperature report their values to a DCS, PLC, or flow computer.

The dynamic mass flow of the 266CXX is calculated using the following equation:

$$Qm \approx \frac{C}{\sqrt{1-\beta^4}} \cdot \varepsilon \cdot d^2 \cdot \sqrt{\rho_1 \cdot dp}$$

Qm	Mass flow
C	Discharge coefficient
β	Diameter ratio
ε	Gas expansion factor
d	Inside diameter of the differential flow sensor
dp	Differential pressure
ρ	Density

The flow calculation process is based on the following standards:

- AGA 3
- DIN EN ISO 5167

… Introduction

Flow coefficient
The discharge coefficient is defined as the actual flow divided by the theoretical flow. It corrects the theoretical equation for the effect on the velocity profile (Reynolds number), assuming that no energy is lost between the pressure taps and pressure tap location.
It is dependent on the differential flow sensor, the diameter ratio, and the Reynolds number.
Compensation for the discharge coefficient ensures a high level of measuring accuracy for flow measurement with primary elements.

Gas expansion factor
The gas expansion factor corrects for density differences between pressure taps due to expansion of compressible media. It does not apply to liquids which are essentially non-compressible.
The gas expansion factor is dependent on the diameter ratio, the isentropic exponent, the differential pressure, and the static pressure of the medium.

Diameter ratio
The diameter ratio is dependent on the inside diameter of the differential flow sensor and the pipe diameter, which in turn are subject to temperature functions.
If the temperature of the medium being measured changes, the material of the process pipe and differential flow sensor expands or contracts.
The thermal expansion coefficients are dependent on the material of the pipe and differential flow sensor, and are used for calculating the change in diameters. This ensures a high level of flow accuracy in applications with low and high temperatures.

Medium density
The medium density has a direct effect on the flow calculation. The 266CXX pressure transmitters compensate for the medium density resulting from changes in temperature and / or pressure as follows:

- Gases as a function of p and T based on gas laws, taking compressibility factors into account; for natural gas, based on AGA 8 or SGERG
- Superheated steam as a function of p and T based on steam tables
- Saturated steam as a function of p based on steam tables
- Liquids as a function of T

Mass flow calculations
With the 266CXX pressure transmitters, mass flow calculations can be configured for the following differential flow sensors:

- Orifice corner pressure taps, ISO
- Orifice flange pressure taps, ISO
- Orifice D and D/2 pressure taps, ISO
- Orifice corner pressure taps, ASME
- Orifice flange pressure taps, ASME
- Orifice D and D/2 pressure taps, ASME
- Orifice flange pressure taps, AGA 3
- Orifice 2.5D and 8D pressure taps
- Small bore orifice, flange pressure taps
- Small bore orifice, corner pressure taps
- ISA 1932 nozzle
- Long radius nozzle wall pressure taps, ISO
- Long radius nozzle wall pressure taps, ASME
- Standard Venturi pipe, rough-cast inlet, ISO
- Standard Venturi pipe, machined inlet, ISO
- Standard Venturi pipe, welded inlet, ISO
- Standard Venturi pipe, rough-cast inlet, ASME
- Standard Venturi pipe, machined inlet, ASME
- Standard Venturi pipe, welded inlet, ASME
- Venturi, nozzle, ISO
- Pitot tube
- Wedge element
- Plus all non-standard flow sensors

ABB offers a complete range of differential flow sensors. We provide the full testing and documentation that your application needs. Whether the requirement is a single orifice plate with a simple Certificate of Conformity or a project requiring full material inspection, traceability, third-party verification, calibration and comprehensive data dossiers – ABB can satisfy all of the requirements.
In addition compact solutions are available, OriMaster, a compact orifice flowmeter, and PitoMaster, a compact pitot flowmeter.

Level measurement
The following functions are available for level measurement with pressure and temperature compensation:

- Level measurement with temperature compensation, on open tank
- Level measurement with pressure and temperature compensation, on closed tank, with and without diaphragm seal
- Fill volume measurement by means of tank shape specification
- Drum water level measurement

All of the functionality, including all the data required for compensated mass flow or for level measurement, is configured entirely using the PC-based DTM 266-MV.
A simplified setting method, which uses the (optional) LCD indicator, is available for flow and level calculation.

Functional specification

Measuring range limits and span limits

Differential pressure sensor

Sensor code	Measuring range upper limit (URL)	Lower range limit (LRL)	Minimum measuring span
A	1 kPa	−1 kPa	0.05 kPa
	10 mbar	−10 mbar	0.5 mbar
	4 in H_2O	−4 in H_2O	0.2 in H_2O
C	6 kPa	−6 kPa	0.2 kPa
	60 mbar	−60 mbar	2 mbar
	24 in H_2O	−24 in H_2O	0.8 in H_2O
F	40 kPa	−40 kPa	0.4 kPa
	400 mbar	−400 mbar	4 mbar
	160 in H_2O	−160 in H_2O	1.6 in H_2O
L	250 kPa	−250 kPa	2.5 kPa
	2500 mbar	−2500 mbar	25 mbar
	1000 in H_2O	−1000 in H_2O	10 in H_2O
N	2000 kPa	−2000 kPa	20 kPa
	20 bar	−20 bar	0.2 bar
	290 psi	−290 psi	2.9 psi

Absolute pressure sensor (second sensor)

Sensor code	Measuring range upper limit (URL)	Lower range limit (LRL)	Minimum measuring span
1	600 kPa	0 abs	6 kPa
	6 bar		0.06 bar
	87 psi		0.87 psi
2	2000 kPa	0 abs	20 kPa
	20 bar		0.2 bar
	290 psi		2.9 psi
3	10000 kPa	0 abs	100 kPa
	100 bar		1 bar
	1450 psi		14.5 psi
4	41000 kPa	0 abs	410 kPa
	410 bar		4.1 bar
	5945 psi		59.5 psi

Span limits

Maximum measuring span = Measuring range upper limit (URL). For differential pressure measurements, can be adjusted up to ± URL (TD = 0.5) within the measuring range limits.

Note
To optimize performance characteristics, it is recommended that you select the transmitter sensor code with the lowest turn down ratio.

Recommendation for square root function

At least 10 % of measuring range upper limit (URL)

Zero position suppression and elevation

The zero position and span can be set to any value within the measuring range limits listed in the table if:

- already set span ≥ minimum span

Temperature input

Process temperature range −200 to 850 °C (−328 to 1562 °F) with external resistance thermometer (Pt100) in four-wire circuit.

Damping

Configurable time constant between 0 and 60 s.
This is in addition to the sensor response time.

Warm-up time

Ready for operation as per specifications in less than 10 s with minimum damping.

Insulation resistance

> 100 MΩ at 500 V DC (between terminals and ground)

Operating limits

Pressure limits

Gauge pressure limits

The transmitter models 266CSX can operate without damage within the following overpressure limits:

Sensors	Filling fluid	Gauge pressure limits
A	Silicone oil	0.5 kPa abs., 5 mbar abs., 0.07 psia and 0.6 MPa, 6 bar, 87 psi or 2 MPa, 20 bar, 290 psi depending on code variant selected*
A	Fluorocarbon (Galden™)	17.5 kPa abs., 175 mbar abs., 2.5 psia and 0.6 MPa, 6 bar, 87 psi or 2 MPa, 20 bar, 290 psi depending on code variant selected*
C to N	Silicone oil	0.5 kPa abs., 5 mbar abs., 0.07 psia and 2 MPa, 20 bar, 290 psi or 10 MPa, 100 bar, 1450 psi or 41 MPa, 410 bar, 5945 psi depending on code variant selected*
C to N	Fluorocarbon (Galden™)	17.5 kPa abs., 175 mbar abs., 2.5 psia and 2 MPa, 20 bar, 290 psi or 10 MPa, 100 bar, 1450 psi or 41 MPa, 410 bar, 5945 psi depending on code variant selected*

* 1 MPa, 10 bar, 145 psi for Kynar-PVDF

Static pressure limits

The transmitter models 266CSX can operate within the specifications with the following limits:

Sensors	Filling fluid	Static pressure limits
A	Silicone oil	3.5 kPa abs., 35 mbar abs., 0.5 psia and 0.6 MPa, 6 bar, 87 psi or 2 MPa, 20 bar, 290 psi depending on code variant selected*
A	Fluorocarbon (Galden™)	17.5 kPa abs., 175 mbar abs., 2.5 psia and 0.6 MPa, 6 bar, 87 psi or 2 MPa, 20 bar, 290 psi depending on code variant selected*
C to N	Silicone oil	3.5 kPa abs., 35 mbar abs., 0.5 psia and 2 MPa, 20 bar, 290 psi or 10 MPa, 100 bar, 1450 psi or 41 MPa, 410 bar, 5945 psi depending on code variant selected*
C to N	Fluorocarbon (Galden™)	17.5 kPa abs., 175 mbar abs., 2.5 psia and 2 MPa, 20 bar, 290 psi or 10 MPa, 100 bar, 1450 psi or 41 MPa, 410 bar, 5945 psi depending on code variant selected*

* 1 MPa, 10 bar, 145 psi for Kynar-PVDF

Test pressure

The transmitters can withstand a pressure test with the following line pressure without leaking:

Model	Test pressure
266CSX	1.5 × nominal pressure (static pressure limit) simultaneously on both sides*

* Meets hydrostatic test requirements of ANSI/ISA-S 82.03.

Temperature limits °C (°F)

Environment

This is the operating temperature.

All models	Ambient temperature limits
Silicone oil	−40 and 85 °C (−40 and 185 °F)
Fluorocarbon (Galden™)	−40 and 85 °C (−40 and 185 °F)

All models	Ambient temperature limits
Integrated digital display (LCD)*	−40 and 85 °C (−40 and 185 °F)
Viton™ gasket	−20 and 85 °C (−4 and 185 °F)
PTFE gasket	−20 and 85 °C (−4 and 185 °F)

* If may no longer be possible to read the digital display (LCD) clearly below −20 °C (−4 °F) and above 70 °C (158 °F).

Note

For applications in potentially explosive environments, the temperature specified on the certificate / approval which depends upon the type of protection sought shall apply.

Process

All models	Process temperature limits
Silicone oil	−40 and 121 °C (−40 and 250 °F)*
Fluorocarbon (Galden™)	−40 and 121 °C (−40 and 250 °F)**
Viton™ gasket	−20 and 121 °C (−4 and 250 °F)
PTFE gasket	−20 and 85 °C (−4 and 185 °F)

* 85 °C (185 °F) for applications under 10 kPa, 100 mbar abs., 1.45 psia up to 3.5 kPa abs., 35 mbar abs., 0.5 psia

** 85 °C (185 °F) for applications below atmospheric pressure up to 17.5 kPa abs., 175 mbar abs., 2.5 psia

Transport and storage

Models 266Cxx – Transport and storage	
Ambient temperature range	−50 to 85 °C (−58 to 185 °F)
	With integrated digital display (LCD): −40 to 85 °C (−40 to 185 °F)
Relative humidity	Up to 75 %

Environmental limits

Electromagnetic compatibility (EMC)

In accordance with EN 61326
Overvoltage strength (with overvoltage protection): 4 kV (in accordance with IEC 1000-4-5 EN 61000-4-5)

Pressure Equipment Directive (PED)

Instruments with a maximum operating pressure of 41 MPa, 410 bar, 5,945 psi comply with Directive 2014/68/EU category III, module H.

Humidity

Relative humidity: up to 100 %.
Condensation, icing: permitted.

Vibration resistance

Acceleration up to 2 g at frequencies of up to 1000 Hz (in accordance with IEC 60068-2-6).

Shock resistance

Acceleration: 50 g
Duration: 11 ms
(in accordance with IEC 60068-2-27).

Humid and dusty atmospheres (IP rating)

The transmitter is dust and sand-proof and protected against immersion effects in accordance with EN 60529 (2001) with IP 67 (IP 68 on request), by NEMA 4X, or by JIS C0920.

Use in potentially explosive atmospheres

Ex marking

Devices in hazardous atmospheres with or without integrated digital display.

For ambient temperatures −40 to 85 °C (−40 to 185 °F) the information based on the temperature classes in the associated certificates, must be complied with.
The temperature sensor circuit (Pt100) and the digital output (pulse / limit value output) must be connected in accordance with the requirements of the Ex certificate.

ATEX / IECEx

Ex-marking	
Type of protection	'Ex d' – flameproof (enclosure)
ATEX (Code E2)	
II 1/2 G Ex db IIC T6 Ga/Gb Ta = −50 °C to +75 °C – IP67	
II 1/2 D Ex tb IIIC T85°C Db Ta = −50 °C to +75 °C – IP67	
IECEx (Code E9)	
Ex db IIC T6 Ga/Gb Ta = −50 °C to +75 °C – IP67	
Ex tb IIIC T85°C Db Ta = −50 °C to +75 °C – IP67	
Type examination certificate	**ATEX (Code E2)**
	FM09AATEX0023X
	IECEx (Code E9)
	IECEx FME 16.0002X

Ex-marking	
Type of protection	'Ex n' – non-sparking and 'Ex t' – enclosure
ATEX (Code E3)	
II 3 G Ex nA nC IIC T6/T5/T4 nA Gc – IP67	
II 3 D Ex tc IIIC T85°C Dc – IP67	
IECEx (Code ER)	
Ex nA nC IIC T6/T5/T4 nA Gc – IP67	
Ex tc IIIC T85°C Dc IP67	
Type examination certificate	**ATEX (Code E3)**
	FM09AATEX0025X
	IECEx (Code ER)
	IECEx FME 16.0004X

FM (USA and Canada)

Ex-marking	
Type of protection	**Explosion proof**
Explosion proof (US):	
Class I, Div. 1, Groups A, B, C, D Ta = −50 to 85 °C	
Explosion proof (Canada):	
Class I, Div. 1, Groups A, B, C, D / T5 Ta = −50 to 85 °C	
Dust Ignition Proof:	
Class II/III, Div. 1, Groups E, F, G D Ta = −50 to 85 °C	
Type of protection	**Non-Incendive**
Class II/III, Div. 1, Groups E, F, G / T5 Ta = −50 to 85 °C	
Type of protection	**Energy limited**
Energy limited (US):	
Class I Zone 2, AEx nA nC IIC T6…T4 Ta = −50 to 85 °C	
Energy limited (Canada):	
Class I Zone 2, Ex nA nC IIC T6…T4 Ta = −50 to 85 °C	
FM approvals	USA (code ET)
	FM16US0066X
	Canada (code ET)
	FM16CA0036X
Type 4X, IP67 for all above markings.	

Combined ATEX, FM and IECEx approvals

Code EN = E2+E9+E3+ER+ET

Electrical data and options

Power supply

Devices with Modbus communication	
Terminals	PWR + / PWR –
Supply voltage	10.5 to 30 V DC

The transmitter operates on terminal voltage of 10.5 to 30 V DC.
The quiescent supply current is 10 mA typically.
The transmitting supply current does not exceed 25 mA.

Output signal

Modbus® RS 485 with 8 bit Remote Terminal Unit (RTU) data transmission.

Modbus® interface	
Configuration (HART®-RS485)	Via an RS485 interface in connection with Asset Vision Basic (DAT200) a HART® communication DTM and a corresponding Device Type Manager (DTM)
Operating (Modbus® communication)	Modbus RTU – 2-wire half-duplex RS485 serial connection
Baud rate	1200, 2400, 4800, 9600 Factory setting: 9600 bps
Parity	None, even, odd Factory setting: none
Typical response time	< 100 milliseconds
Response delay time	0 to 200 milliseconds Factory setting: 50 milliseconds
Device address	1 to 247 Factory setting: 247
Register address offset	One base

LCD display

Figure 2: LCD display (example)

Integral LCD display (code L1)

- Wide screen LCD display, 128 × 64 pixel, 52.5 × 27.2 mm (2.06 × 1.07 in), dot matrix, multilingual.
- Four buttons for device configuration and management.
- Easy setup for quick commissioning.
- Customized visualizations which the user can select.
- Total value and actual value flow indication.

The display can also be used to show static pressure, sensor temperature, and diagnosis notice, as well as make configuration settings.

Integral LCD display with TTG-(Through-The-Glass) operation (code L5)
As with the integral LCD display above, but featuring an innovative TTG (Through-The-Glass) button technology which can be used to activate the device's configuration and management menus without having to remove the transmitter housing cover.
The TTG (Through-The-Glass) buttons are protected against accidental activation.

Measuring accuracy

Reference conditions according to IEC 60770:

- Ambient temperature 20 °C (68 °F), rel. humidity 65 %, atmospheric pressure 1.013 hPa (1.013 mbar).
- Position of measuring cell (separating diaphragm areas) vertical.
- Measuring span based on zero point.
- Separating diaphragms made from stainless steel AISI 316 L or Hastelloy, gasket Viton / Perbunan, silicone oil filling fluid
- Digital trim values equal to the span end points.

Unless otherwise stated, errors are specified as a % of the measuring span value.
Some measuring accuracy levels relating to the upper measuring range limit (URL) are affected by the current turn down (TD); i.e., the ratio of the upper measuring range limit to the already set span.

Note
FOR OPTIMUM MEASURING ACCURACY, IT IS RECOMMENDED THAT YOU SELECT THE SENSOR CODE WHICH WILL PROVIDE THE LOWEST TD VALUE.

Dynamic response

In accordance with IEC 61298-1

Sensors	Time constant (63.2 % of total step response)
Sensors F to R	150 ms
Sensor C	400 ms
Sensor A	1000 ms
266CXX: Delay time for all sensors	70 ms

Response time (total) = delay time + time constant

Measuring error

In % of calibrated span, consisting of terminal-based non-linearity, hysteresis, and non-repeatability.

Model	DP-Sensor	For TD range	Measuring error
266CSH	A to N	From 1:1 to 10:1	±0.075 %
	A	From 10:1 to 20:1	±(0.075 + 0.005 × TD − 0.05) %
	C	From 10:1 to 30:1	±(0.075 + 0.005 × TD − 0.05) %
	F to N	From 10:1 to 100:1	±(0.075 + 0.005 × TD − 0.05) %
266CST	A to N	From 1:1 to 10:1	±0.04 %
	A	From 10:1 to 20:1	±(0.04 + 0.005 × TD − 0.05) %
	C	From 10:1 to 30:1	±(0.04 + 0.005 × TD − 0.05) %
	F to N	From 10:1 to 100:1	±(0.04 + 0.005 × TD − 0.05) %

Recommendation for square root function
At least 10 % of upper measuring range limit (URL)

Model	P_{abs} sensor (second sensor)	Measuring error
266CXX	1 to 3	±0.05 %
	4	±0.075 %

Model	Process temperature measurement (Pt100) in acc. with IEC 60751	Measuring error - transmitter part
266CXX	−200 to 850 °C (−328 to 1562 °F)	±0.3 K (0.54 °F)

266CXX: The accuracy of the mass or standard volume flow is not affected by the accuracy of the dp, p, and T measurement alone; rather, it also depends upon the primary device used (flow coefficient), the pressure and temperature range to be compensated, as well as other parameters.
In typical applications, the flow measurement accuracy (without the primary device accuracy) is ±0.7 to 0.9 % of the mass flow.

Ambient temperature
Per 20 K change within the limits of −40 to 85 °C (per 36 °F change within the limits of −40 to 185 °F):

Model	Sensor	For TD range	
266CSH	A	10:1	±(0.08 % URL + 0.06 % measuring span)
	C to N	10:1	±(0.04 % URL + 0.06 % measuring span)
266CST	A	10:1	±(0.06 % URL + 0.045 % measuring span)
	C to N	10:1	±(0.03 % URL + 0.045 % measuring span)

In the event of a change to the ambient temperature of −10 °C to 60 °C (14 to 140 °F):

Model	Sensor	For TD range	
266CSH	A	10:1	±(0.16 % URL + 0.065 % measuring span)
	C to N	10:1	±(0.08 % URL + 0.065 % measuring span)
266CST	A	10:1	±(0.12 % URL + 0.05 % measuring span)
	C to N	10:1	±(0.06 % URL + 0.05 % measuring span)

Per 10 K change within the limits of −40 to −10 °C or 60 to 85 °C (per 18 °F change within the limits of −40 to 14 °F or 140 to 185 °F):

Model	Sensor	For TD range	
266CSH	A	10:1	±(0.066 % URL + 0.04 % measuring span)
	C to N	10:1	±(0.033 % URL + 0.04 % measuring span)
266CST	A	10:1	±(0.05 % URL + 0.03 % measuring span)
	C to N	10:1	±(0.025 % URL + 0.03 % measuring span)

Absolute pressure sensor
Per 20 K change between the limits of −40 to 85 °C (−40 to 185 °F):
±(0.08 % URL + 0.08 % measuring span)

Limited to ±(0.1 % URL + 0.1 % measuring span) for the entire temperature range of 125 K within the limits of −40 to 85 °C (−40 to 185 °F).

Static pressure
Zero signal errors may be calibrated out at operating pressure.

Measuring range	Sensor A	Sensors C, F, L, N
Zero signal error	Up to 2 bar: 0.05 % URL	Up to 100 bar: 0.05 % URL
	> 2 bar: 0.05 % URL/bar	> 100 bar: 0.05 % URL/100 bar
Span error	Up to 2 bar: 0.05 % measuring span	Up to 100 bar: 0.05 % measuring span
	> 2 bar: 0.05 % Measuring span / bar	> 100 bar: 0.05 % Measuring span / 100 bar

... Measuring accuracy

Electromagnetic field
Meets all requirements of EN 61326

Mounting position
Rotations in the plane of the diaphragm have a negligible effect. A tilt from the vertical of up to 90° causes a zero [point] shift of up to 0.35 kPa (3.5 mbar, 1.4 in H_2O), which can be corrected by making an appropriate zero position adjustment. There is no effect on the measuring span.

Long-term stability
Sensors C to N:
±0.15 % of URL over a period of 10 years
(±0.05 % URL/year)
Sensor A:
±0.3 % of URL over a period of 10 years (±0.2 % URL/year)

Total performance
Only for differential pressure measurement; similar to DIN 16086. Within an ambient temperature change range of −10 to 60 °C (14 to 140 °F), up to 10 MPa, 100 bar, 1450 psi static pressure.

Model	Sensor	For TD range	Total performance (DP)
266CSH	C to N	1:1	±0.17 % of calibrated span
266CST	C to N	1:1	±0.14 % of calibrated span

The total performance includes the measuring error (non-linearity including hysteresis and non-repeatability), the thermal change in the ambient temperature as regards the zero signal and measuring span, as well as the effect of the static pressure on the zero signal and measuring span.

$$E_{perf} = \sqrt{(E_{\Delta TZ} + E_{\Delta TS})^2 + E_{\Delta PZ}{}^2 + E_{\Delta PS}{}^2 + E_{lin}{}^2}$$

E_{perf} Total Performance
$E_{\Delta TZ}$ Effect of the ambient temperature on the zero signal
$E_{\Delta TS}$ Effect of the ambient temperature on the measuring span
$E_{\Delta PZ}$ Effect of the static pressure on the zero signal
$E_{\Delta PS}$ Effect of the static pressure on the measuring span
E_{lin} Measuring error

Technical specification

Note
Please refer to the order information to check the availability of different versions of the relevant model.

Materials

Process separating diaphragms*
Stainless steel 1.4435 (AISI 316L);
Hastelloy C276®;
Monel 400®; Monel 400®, gold-plated;
Tantalum

Process flanges, adapters, screw plugs, and vent / drain valves*
Stainless steel 1.4404 / 1.4408 (AISI 316L);
Hastelloy C276®; Monel 400®;
Kynar (flange made from stainless steel AISI 316L with PVDF insert)

Sensor filling fluid
Silicone oil; Fluorocarbon (Galden™)

Mounting bracket**
Galvanized C steel with chromium passivation;
Stainless steel AISI 316, AISI 316 L

Seals*
Viton™ (FPM); Buna® (NBR); EPDM;
PTFE or FEP-coated Viton™ (only for PVDF Kynar process connection);
Graphite

Pressure sensor housing
Stainless steel 1.4404 (AISI 316L)

Screws and nuts
Screws and nuts made from stainless steel AISI 316, class A4-70 as per UNI 7323 (ISO 3506) in compliance with NACE MR0175 Class II

Electronics housing and cover
Aluminum alloy (copper content ≤ 0.3 %) with baked epoxy finish (color RAL9002); Stainless steel AISI 316L.

Cover O-ring
Buna N® (Perbunan)

* Wetted parts of the transmitter.
** U-bolt material: Stainless steel AISI 400;
Screw material: High-strength alloy steel or stainless steel AISI 316

Local zero point, measuring span, and write protection settings

Fiber glass-reinforced polyphenylene oxide (removable)

Plates

Stainless steel AISI 316 for transmitter name plate, certification plate, optional measuring point tag plate. Settings plate attached to electronics housing, and optional tag plate with customer data.
All plates laser-labeled.

Calibration

Standard:

0 to measuring range upper limit, for ambient temperature and atmospheric pressure

Optional:

To specified measuring span

Surge protection

The 266 Modbus multivariable pressure transmitter comes standard with a surge / transient suppression scheme build into the termination block.

- Up to 4 kV on power supply
- Up to 2 kV on I/O
- Voltage: 1.2 µs rise time / 50 µs delay time at half value

Optional accessories

Mounting bracket

For vertical and horizontal 60 mm (2 in) pipes or wall mounting

LCD display

Can be rotated in 90° increments into 4 positions

Additional tag plates

Code I2:
For measuring point tag (up to 30 characters) and calibration specifications (up to 30 characters: lower and upper value plus unit), attached to transmitter housing.
Code I1:
For customer data (4 lines with 30 characters each), attached to transmitter housing with wire.

Cleaning stage for oxygen applications (O_2)

Refer to **Ordering Information** on page 23.

Certificates

Test, design, characteristics, material traceability. Refer to **Ordering Information** on page 23.

Name plate and operating instruction language

Refer to **Ordering Information** on page 23.

Process connections

Flanges

¼-18 NPT on the process axis

Adapters

½-14 NPT on the process axis

Center distance

54 mm (2.13 in) between flanges;
51 mm, 54 mm, or 57 mm (2.01 in, 2.13 in, or 2.24 in) between adapters

Fastening screw threads

7/16-20 UNF with 41.3 mm center distance
Or with process flange code C:

- M10 with operating pressures of up to 10 MPa, 100 bar, 1450 psi
- M12 with higher operating pressures of up to 41 MPa, 410 bar, 5945 psi

… Technical specification

Electrical connections

Cable entry

Two ½-14 NPT or M20 × 1.5 threaded bores for cable glands, directly on housing.

Terminals

- Two terminal for power (+ and –).
- Two terminals for RS485 communication.
- Four terminals for a Pt100 resistance thermometer with four-wire technology.

For wire cross sections of up to 2.5 mm^2 (14 AWG) and connection points for testing and communication purposes.

Grounding

Internal and external ground terminals are provided for 6 mm^2 (10 AWG) wire cross sections.

Mounting position

The transmitters can be installed in any position.
The electronic housing can be rotated into any position. A stop is provided to prevent overturning.

Weight

Pressure transmitter without options

Approximately 3.8 kg (8.4 lb);
Add 1.5 kg (3.3 lb) for housings made from stainless steel.

Packaging

Add 650 g (1.5 lb) for packaging

Packaging

Carton with dimensions of approx.
28 × 23 × 24 cm (11 × 9 × 9 in)

Configuration

Standard configuration

Transmitters are calibrated at the factory to the customer's specified measuring range. The calibrated range and measuring point number are specified on a tag plate.
If this data has not been specified, the transmitter will be delivered with the plate left blank and the following configuration.

Parameter	Value
Device mode	Operate (Modbus)
Device address	247
Multivariable calculation	No calculation
Software tag (max. 8 characters)	blank
Optional LCD display	PV (DP) in kPa; output in percent as bargraph display
(DP) Physical unit	kPa
(DP) Output scale 0%	0 (LRL)
(DP) Output scale 100%	Upper Range Limit (URL)
Output	Linear
Damping	0.125 s
(PS) Physical unit	MPa
(PS) Output scale 0%	0 (LRL)
(PS) Output scale 100%	Upper Range Limit (URL)
Damping	0.125 s
(T) Physical unit	°C
(T) Output scale 0%	–200 (LRL)
(T) Output scale 100%	+850 Upper Range Limit (URL)
Damping	10 s

Any or all of the configurable parameters listed above – including the lower and upper range values (with the same unit of measurement) – can easily be changed using a PC running the configuration software with the DTM for 266Cxx-Modbus.
Specifications concerning the flange type and materials, O-ring and vent / drain valve materials, and additional device options are stored in the transmitter database.

Note

For device functionality and simulation purpose a 178 Ω resistor (206 °C [402.8 °F]) and 2 jumpers are installed in the PT100 connection

Mounting dimensions

Transmitter with barrel housing – Horizontal flanges

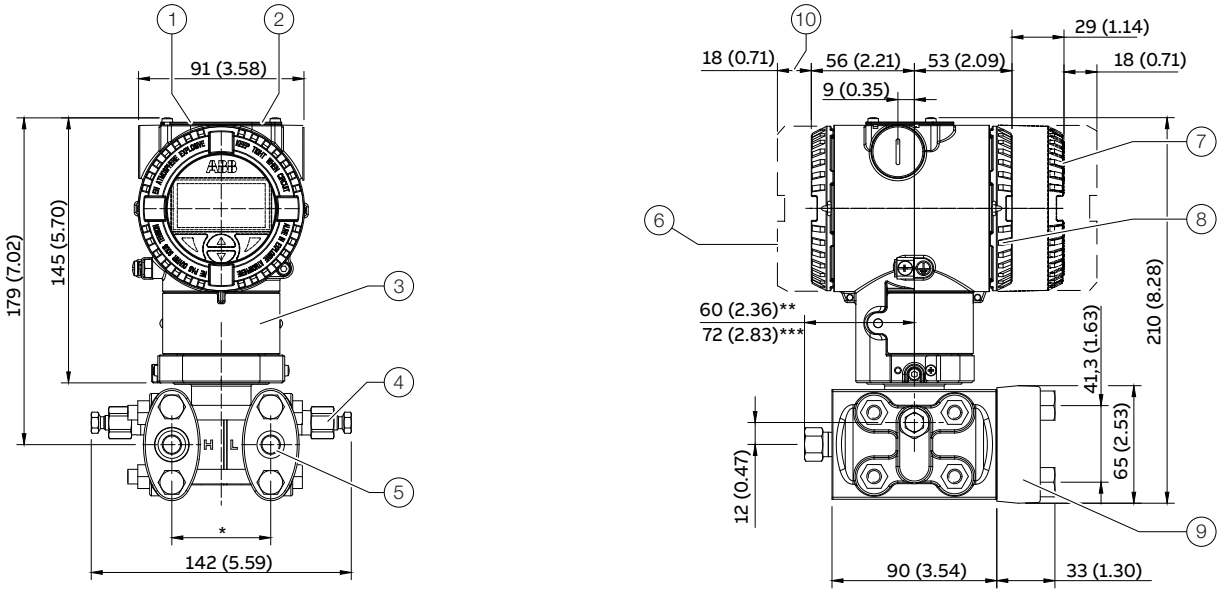

1. Push buttons
2. Name plate
3. Certification plate
4. Vent / drain valve
5. Process connection
6. Terminal side
7. LCD display housing cover
8. Electronics side
9. Process flange adapter
10. Space for removing the cover

* 54 mm (2.13 in) via ¼-18 NPT process flanges;
51 mm (2.01 in), 54 mm (2.13 in), or 57 mm (2.24 in) via ½-14 NPT adapter flanges.

Note
Process connection and seal groove satisfy IEC 161518. Thread for attaching adapter flanges or other components (for example manifold) on the process flange: $^{7}/_{16}$-20 UNF.

** With screw plug

*** With vent / drain valve

Figure 3: Barrel housing – horizontal flanges, Dimensions in mm (in)

... Mounting dimensions

Transmitter with barrel housing – Vertical flanges

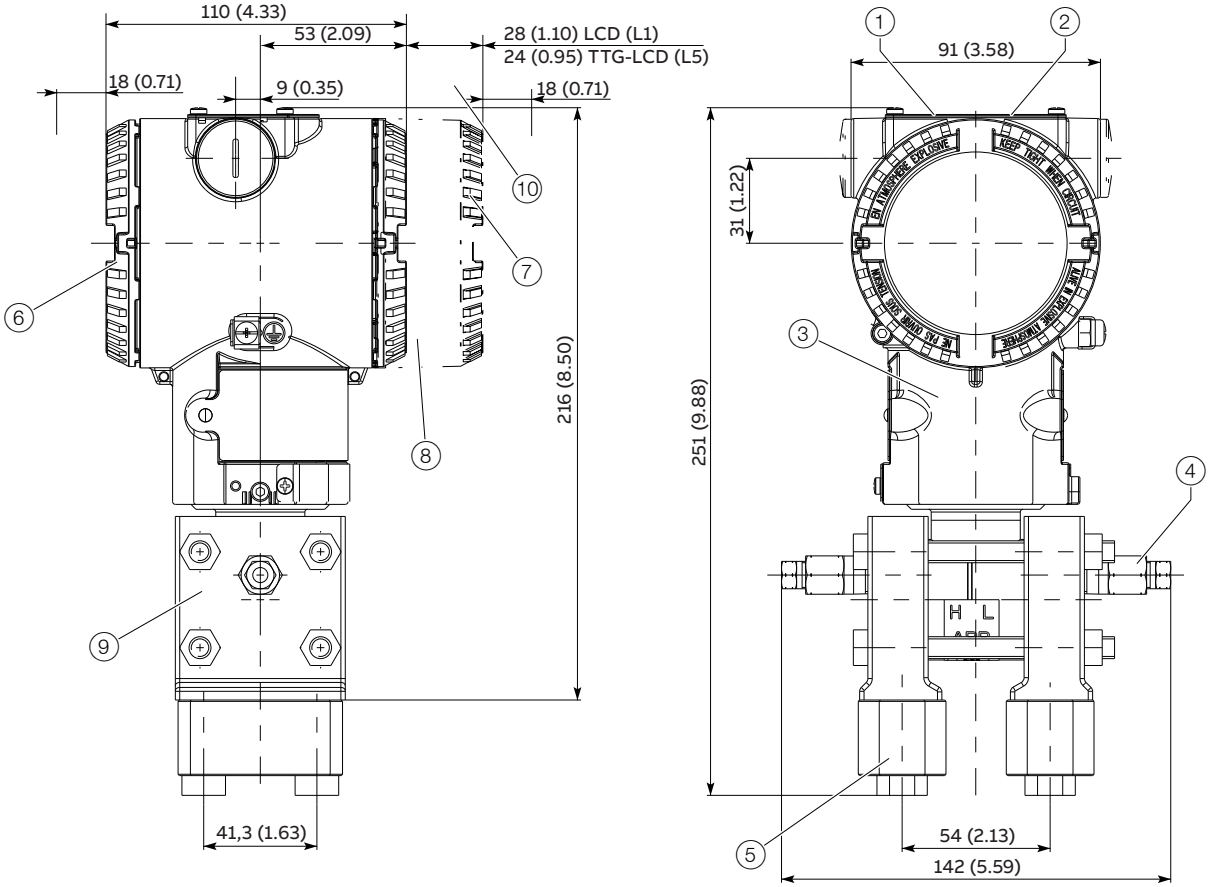

1. Pusch buttons
2. Name plate
3. Certification plate
4. Vent / drain valve
5. Process connection
6. Terminal side
7. LCD display housing cover
8. Electronics side
9. Process flange adapter
10. Space for removing the cover

Figure 4: Barrel housing - vertical flanges, Dimensions in mm (in)

Transmitter with mounting bracket, for vertical or horizontal mounting on 60 mm (2 in) pipe pipe

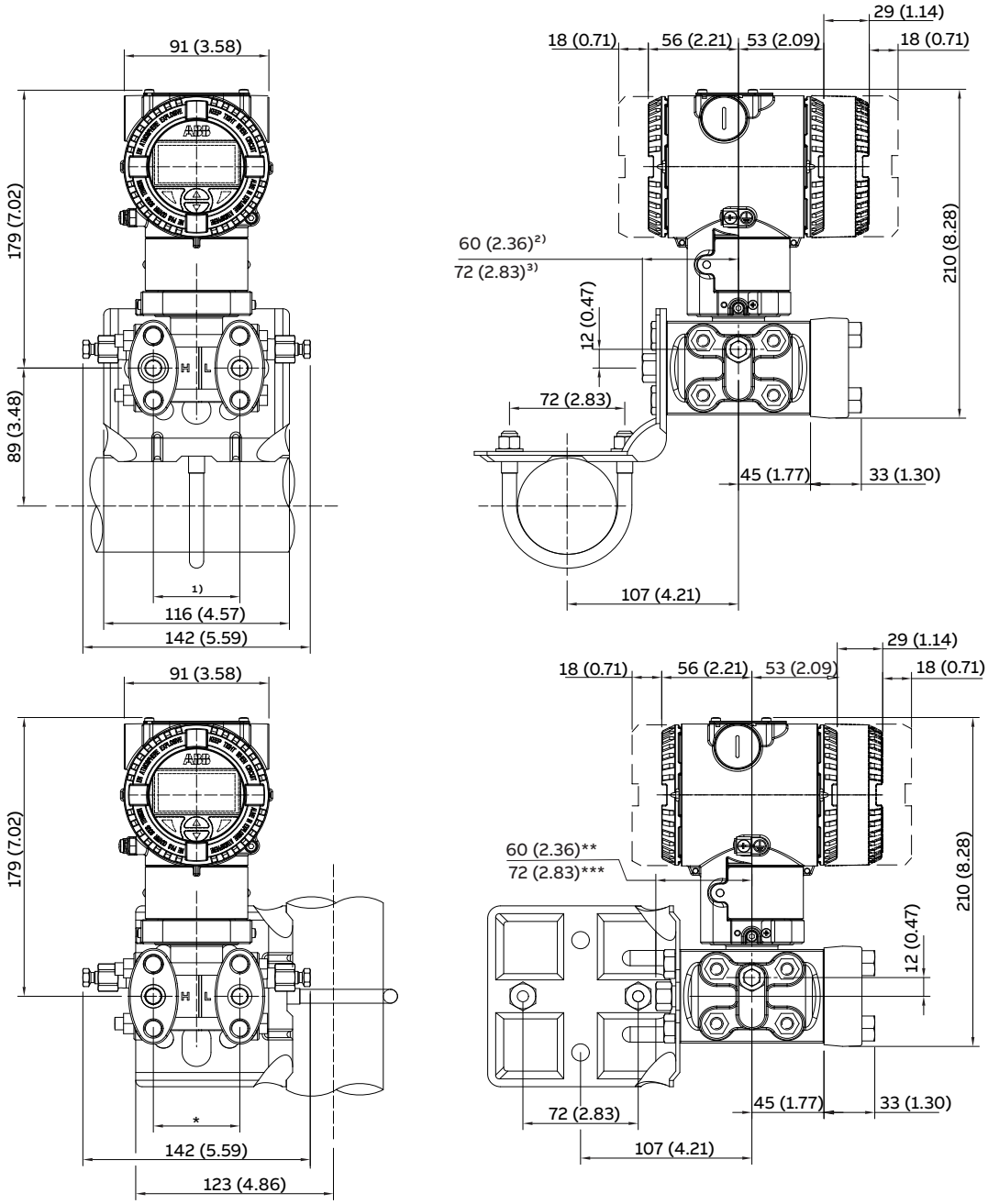

* 54 mm (2,13 in) via ¼-18 NPT process flanges;
51 mm (2,01 in), 54 mm (2,13 in), or 57 mm (2.24 in) via ½-14 NPT adapter flanges.

Note
Process connection and seal groove satisfy IEC 161518. Thread for attaching adapter flanges or other components (for example manifold) on the process flange: $^{7}/_{16}$-20 UNF.

** With screw plug

*** With vent / drain valve

Figure 5: Pipe mounting – barrel housing, Dimensions in mm (in)

... Mounting dimensions

Transmitter with DIN aluminum housing – horizontal flanges with mounting bracket for vertical or horizontal mounting on 60 mm (2 in) pipe

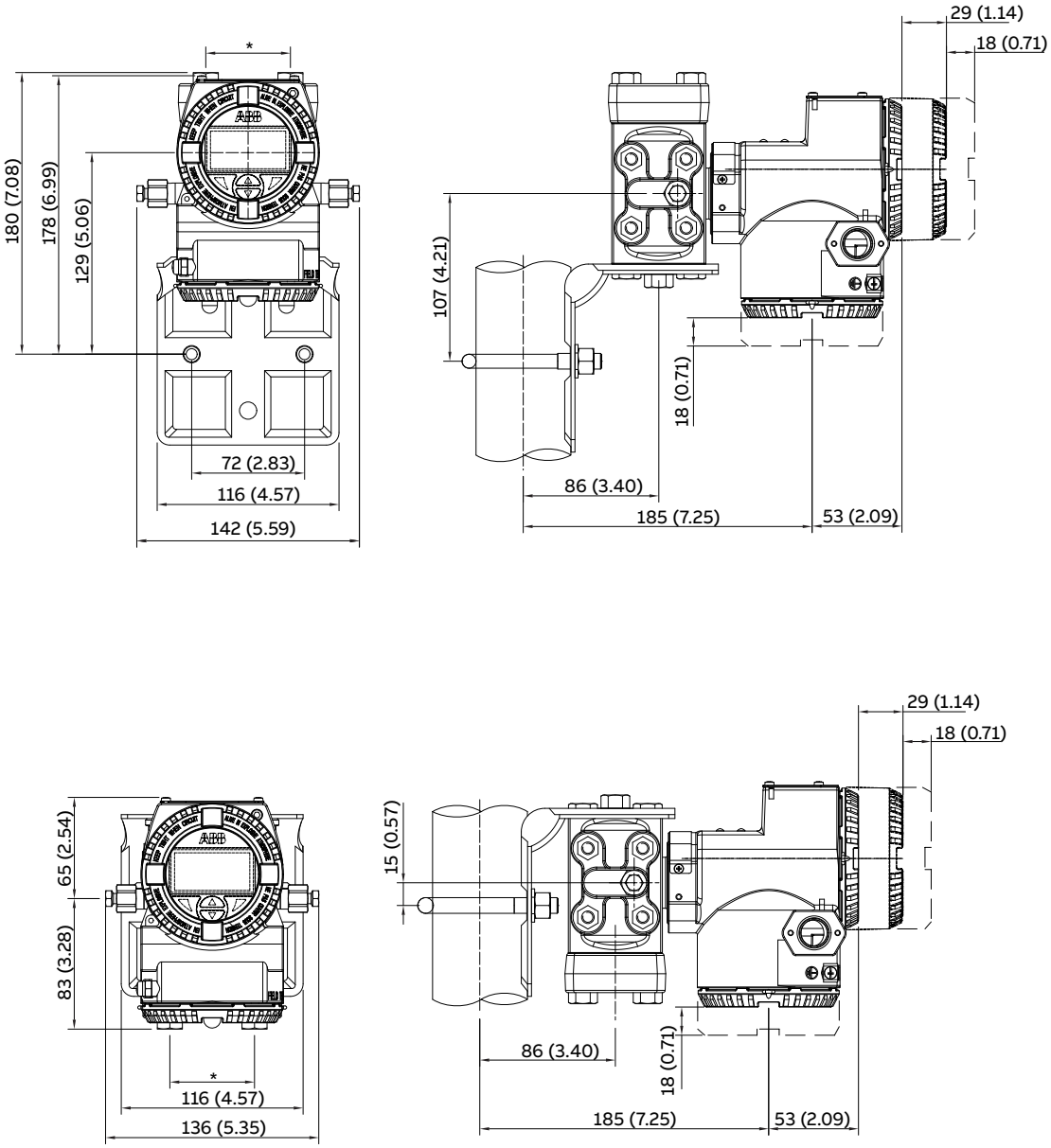

* 54 mm (2.13 in) via ¼-18 NPT process flanges;
51 mm (2.01 in), 54 mm (2.13 in), or 57 mm (2.24 in) via ½-14 NPT adapter flanges.

Note
Process connection and seal groove satisfy IEC 161518. Thread for attaching adapter flanges or other components (for example manifold) on the process flange: $^{7}/_{16}$-20 UNF.

Figure 6: Pipe mounting – DIN housing, Dimensions in mm (in)

Transmitter with flat bracket, for vertical or horizontal mounting on 60 mm (2 in) pipe

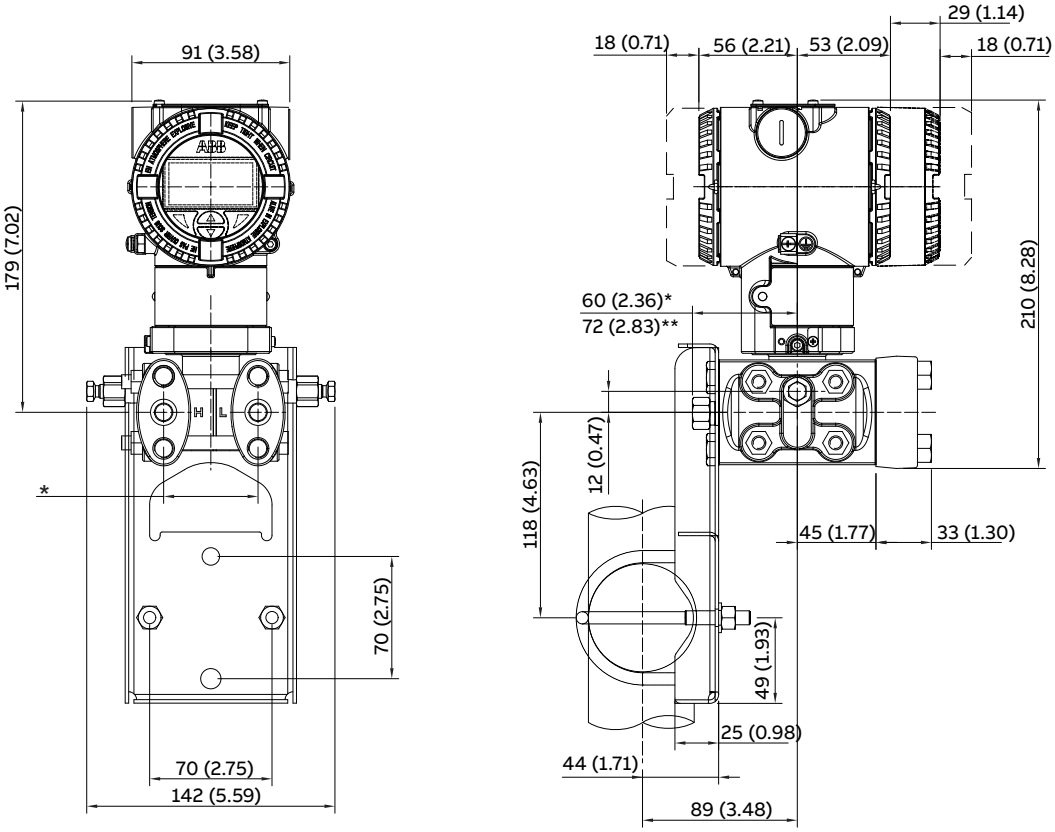

* With screw plug

** With vent / drain valve

Figure 7: Flat bracket for pipe mounting – barrel housing, Dimensions in mm (in)

Electrical connections

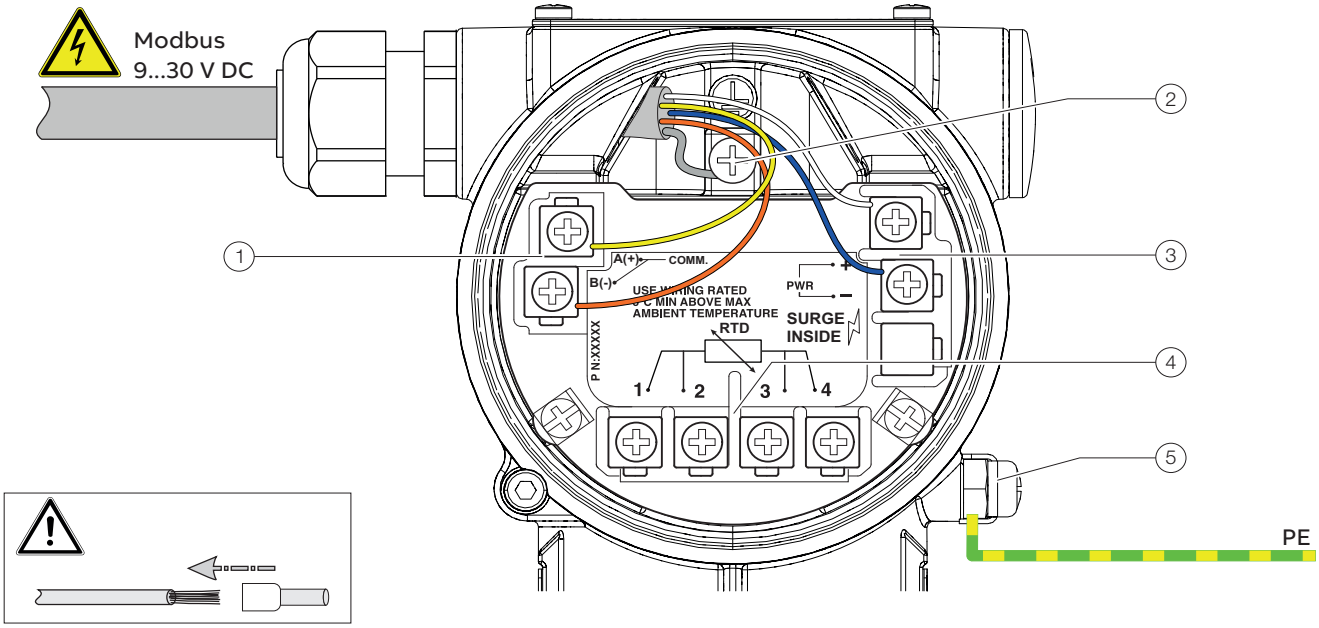

1. Terminals for Modbus® interface
2. Terminal for PE / Cable Shield
3. Terminals for power supply
4. Terminals for Pt100 resistance thermometer
5. Ground terminal

PE Potential equalization

Figure 8: Connection on the device (example)

Ordering Information

Model 266CSH and 266CST

Base model								
Multivariable transmitter for mass flow and level, base accuracy 0.075 %	**266CSH**	**X**	**X**	**X**	**X**	X	X	X
Multivariable transmitter for mass flow and level base accuracy 0.04 %	**266CST**	**X**	**X**	**X**	**X**	X	X	X
Sensor Span Limits								
0.05 and 1 kPa (0.5 and 10 mbar 0.2 and 4 in H_2O)		A*						
0.2 and 6 kPa (2 and 60 mbar / 0.8 and 24 in H_2O)		C						
0.4 and 40 kPa (4 and 400 mbar / 1.6 and 160 in H_2O)		F						
2.5 and 250 kPa (25 and 2500 mbar / 10 and 1000 in H_2O)		L						
20 and 2000 kPa (0.2 and 20 bar / 2.9 and 290 psi)		N						
Maximum Working Pressure								
0 and 0.6 MPa / 0 and 6 bar / 0 and 87 psi (only with Sensor Span Limits code A)			1					
0 and 2 MPa / 0 and 20 bar / 0 and 290 psi			2					
0 and 10 MPa / 0 and 100 bar / 0 and 1450 psi / (not with Sensor Span Limits code A)			3					
0 and 41 MPa / 0 and 410 bar / 0 and 5945 psi / (not with Sensor Span Limits code A)			4					
Diaphragm Material / Fill Fluid								
AISI 316L SST (1.4435) / Silicone oil (NACE)				S				
Hastelloy C-276 / Silicone oil (NACE)				K				
Monel 400 / Silicone oil (NACE)				M				
Monel 400 gold-plated / Silicone oil (NACE)				V				
Tantalum / Silicone oil (NACE)				T				
AISI 316L SST (1.4435) / Inert fluid - Galden (Suitable for oxygen applications) (NACE)				A**				
Hastelloy C-276 / Inert fluid - Galden (Suitable for oxygen applications) (NACE)				F**				
Monel 400 / Inert fluid - Galden (Suitable for oxygen applications) (NACE)				C**				
Monel 400 gold-plated / Inert fluid - Galden (Suitable for oxygen applications) (NACE)				Y**				
Tantalum / Inert fluid - Galden (Suitable for oxygen applications) (NACE)				D**				
Process Flanges and Adapters Material / Connection								
AISI 316L SST (1.4404 / 1.4408) / ¼-18 NPT female direct / (horizontal connection) (NACE)					A			
AISI 316L SST (1.4404 / 1.4408) / ½-14 NPT female through adapter / (horizontal connection) (NACE)					B			
AISI 316L SST (1.4404 / 1.4408) / ¼-18 NPT female direct (DIN 19213) / (horizontal connection) (NACE)					C			
Hastelloy C-276 / ¼-18 NPT female direct / (horizontal connection) (NACE)					D			
Hastelloy C-276 / ½-14 NPT female through adapter / (horizontal connection) (NACE)					E			
Monel 400 / ¼-18 NPT female direct / (horizontal connection) (NACE)					G			
Monel 400 / ½-14 NPT female through adapter / (horizontal connection) (NACE)					H			
Kynar (PVDF) / ¼-18 NPT female direct (MWP = 1 MPa / 10 bar / 145 psi) / (insert on side of flange)					P			
AISI 316L SST (1.4404 / 1.4408) / ¼-18 NPT female direct / (vertical connection) (NACE)					Q			

* Not available with Diaphragm Material code M, V, T, C, Y, D

** Suitable for Oxygen service

Continued see next page

… Ordering Information

Base model				
Multivariable transmitter for mass flow and level, base accuracy 0.075 %	**266CSH**	**X**	**X**	**X**
Multivariable transmitter for mass flow and level base accuracy 0.04 %	**266CST**	**X**	**X**	**X**
Bolts Material / Gaskets Material				
AISI 316L SST (NACE - non exposed) / Viton (Suitable for oxygen applications)		3*		
AISI 316L SST (NACE - non exposed) / PTFE (Max. 25 MPa / 250 bar / 3625 psi)		4		
AISI 316L SST (NACE - non exposed) / EPDM		5		
AISI 316L SST (NACE - non exposed) / Perbunan		6		
AISI 316L SST (NACE - non exposed) / Graphite		7		
AISI 316L SST (NACE - non exposed) / FEP (only available with Kynar [PVDF] process connection)		T		
Housing Material / Electrical Connection				
Aluminium alloy (Barrel type) / ½-14 NPT			A	
Aluminium alloy (Barrel type) / M20 × 1.5			B	
AISI 316L SST (Barrel type) / ½-14 NPT			S	
AISI 316L SST (Barrel type) / M20 × 1.5			T	
Output				
Modbus RS 485 / No additional options				N
Modbus RS 485 / Options requested (to be ordered by Additional ordering code)				6

* Suitable for Oxygen service

Additional ordering information

Additional ordering information			
Multivariable transmitter for mass flow and level, base accuracy 0.075 %	**266CSH**	**XX**	**XX**
Multivariable transmitter for mass flow and level base accuracy 0.04 %	**266CST**	**XX**	**XX**
Vent and Drain Valve Material / Position			
AISI 316L SST (1.4404) / On process axis (NACE)		V1	
AISI 316L SST (1.4404) / On flanges side top (NACE)		V2	
AISI 316L SST (1.4404) / On flanges side bottom (NACE)		V3	
Hastelloy C-276 / On process axis (NACE)		V4	
Hastelloy C-276 / On flanges side top (NACE)		V5	
Hastelloy C-276 / On flanges side bottom (NACE)		V6	
Monel 400 / On process axis (NACE)		V7	
Monel 400 / On flanges side top (NACE)		V8	
Monel 400 / On flanges side bottom (NACE)		V9	
Explosion Protection Certification			
ATEX Group II Category 1/2 GD – Flameproof Ex d			E2
ATEX Group II Category 3 GD – Type of protection "N" Ex nL design compliance			E3
FM Approvals (USA and Canada) Explosion proof and Type „n“			ET
Combined ATEX, IECEx, FM Approvals (USA and Canada)			EN
IEC Approval Group II Category 1/2 GD – Flameproof Ex d			E9
IEC Approval Group II Category 3 GD – Type of protection "N" Ex nL design compliance			ER

Continued see next page

Additional ordering information							
Multivariable transmitter for mass flow and level, base accuracy 0.075 %	**266CSH**	**XX**	**XX**	**XX**	**XX**	**XX**	**XX**
Multivariable transmitter for mass flow and level base accuracy 0.04 %	**266CST**	**XX**	**XX**	**XX**	**XX**	**XX**	**XX**
Integral LCD							
With integral LCD display		L1					
TTG (Through The Glass) integral digital LCD display		L5					
Mounting Bracket Shape / Material							
For pipe mounting / Carbon steel (not suitable for AISI housing)			B1				
For pipe mounting / AISI 316 SST (1.4401) (not suitable for AISI housing)			B2				
For wall mounting / Carbon steel (not suitable for AISI housing)			B3				
For wall mounting / AISI 316 SST (1.4401) (not suitable for AISI housing)			B4				
Flat type bracket / AISI 316 SST (1.4401) (suitable for AISI housing)			B5				
Operating Instruction Language							
English				M5			
Label and Tag Language							
German					T1		
Italian					T2		
Spanish					T3		
French					T4		
Additional Tag Plate							
Supplemental wired-on stainless steel plate (4 lines, 32 characters each)						I1	
Laser printing of tag on stainless steel plate						I2	
Stainless steel tag, certification and wire-on plates						I3	
Configuration							
Standard pressure = in H_2O / psi at 68 °F							N2
Standard pressure = in H_2O / psi at 39.2 °F							N3
Standard pressure = in H_2O / psi at 20 °C							N4
Standard pressure = in H_2O / psi at 4 °C							N5
Custom							N6

Continued see next page

… Ordering Information

Additional ordering information for model 266CSH						
Multivariable transmitter for mass flow and level, base accuracy 0.075 %	**266CSH**	**XX**	**XX**	**XX**	**XX**	**XX**
Multivariable transmitter for mass flow and level base accuracy 0.04 %	**266CST**	**XX**	**XX**	**XX**	**XX**	**XX**
Preparation Procedure						
Oxygen service cleaning, Pmax = 12 MPa (120 bar, 1740 psi) or maximum working pressure (lower value), Tmax = 60 °C / 140 °F (only available with inert fill and Viton gasket)		P1				
Hydrogen service preparation (Fluid film)		P2				
Certificates						
Inspection certificate 3.1 acc. EN 10204 of calibration			C1			
Inspection certificate 3.1 acc. EN 10204 of cleanliness stage			C3			
Inspection certificate 3.1 acc. EN 10204 of helium leakage test of the sensor module			C4			
Inspection certificate 3.1 acc. EN 10204 of pressure test			C5			
Declaration of compliance with the order 2.1 acc. EN 10204 for instrument design			C6			
Separate calibration record			CC			
PMI test on wetted parts			CT			
Material Traceability						
Inspection certificate 3.1 acc. EN 10204 of pressure-bearing and process wetted parts with analysis certificates as material verification				H3*		
Material certificate 2.2 acc. EN 10204 of the pressure bearing and process wetted parts				H4		
Connector						
With cable gland M20 × 1.5					U8	
Housing Accessories						
Integral mount manifold (price adder just for assembling, not for manifold)						A1

* Minor Parts with Factory Certificate acc. to EN 10204

Standard delivery scope (changes possible with additional ordering code)

- Adapters supplied loose
- Sealing plugs for horizontal connection flanges on the process axis; not for PVDF Kynar insert or for vertical connection flanges (no vent / drain valves)
- For standard applications (without explosion protection)
- No display, no mounting bracket, no surge protector
- Operating instruction and English labelling
- Configuration with kPa and °C units
- No test, inspection, or material certificates

Important remark for all models

The selection of suitable wetted parts and filling fluid for compatibility with the process media is a customers responsibility, if not otherwise notified before manufacturing.

NACE compliance information

1 The materials of constructions comply with metallurgical recommendations of NACE MR0175/ISO 15156 for sour oil field production environments. As specific environmental limits may apply to certain materials, please consult latest standard for further details. Materials AISI 316 / AISI 316L, Hastelloy C-276, Monel 400 also conform to NACE MR0103 for sour refining environments.

2 NACE MR0175 addresses bolting requirements in two classes:
   - **Exposed bolts**:
     Bolts directly exposed to the sour environment or buried, encapsulated or anyway not exposed to atmosphere
   - **Non exposed bolts**:
     The bolting must not be directly exposed to sour environments, and must be directly exposed to the atmosphere at all times.

266CSH, 266CST bolting identified by “NACE” are in compliance to the requirements of NACE MR0175 when considered “non exposed bolting”

Trademarks

Buna-N is a registered trademark of DuPont Dow Elastomers.

Hastelloy is a registered trademark of Haynes International, Inc.

Monel is a registered trademark of Special Metals Corporation

Modbus is a registered trademark of the Modbus Organization

Galden is a Montefluos trademark

Kynar is an Elf Atochem North America Inc. trademark

Viton is a DuPont de Nemours trademark

Sales **Service**

Castel Maggiore (BO) 40013
Via Lirone 60/i

e-mail: info@eurotecsrl.com
Tel: +39 051/6321595
Website: www.eurotecsrl.com

C.F.: 04103780377
P.I.: 01596581205

ABB Limited
Measurement & Analytics
Howard Road, St. Neots
Cambridgeshire, PE19 8EU
UK
Tel: +44 (0)870 600 6122
Fax: +44 (0)1480 213 339
Email: enquiries.mp.uk@gb.abb.com

ABB Automation Products GmbH
Measurement & Analytics
Schillerstr. 72
32425 Minden
Germany
Tel: +49 571 830-0
Fax: +49 571 830-1806

ABB Inc.
Measurement & Analytics
125 E. County Line Road
Warminster, PA 18974
USA
Tel: +1 215 674 6000
Fax: +1 215 674 7183

ABB S.p.A.
Measurement & Analytics
Via Luigi Vaccani 4
22016 Tremezzina (CO)
Italy
Tel: +39 0344 58111
Email: abb.instrumentation@it.abb.com

abb.com/pressure

We reserve the right to make technical changes or modify the contents of this document without prior notice. With regard to purchase orders, the agreed particulars shall prevail.
ABB does not accept any responsibility whatsoever for potential errors or possible lack of information in this document.
We reserve all rights in this document and in the subject matter and illustrations contained therein. Any reproduction, disclosure to third parties or utilization of its contents – in whole or in parts – is forbidden without prior written consent of ABB.
Copyright© 2018 ABB
All rights reserved

3KXP400011R1001

DS/266CSH/CST/MODBUS-EN Rev. A 06.2018