ABB MEASUREMENT & ANALYTICS | DATA SHEET

# 266CRH / CRT

## Multivariable pressure transmitter with Modbus® communication

# Measurement made easy

Pressure transmitters – 2600T series. Engineered solutions for all applications.

**Base accuracy**

- 0.075 % of calibrated span (266CRH)
- 0.04 % of calibrated span (266CRT)

**266CRH/CRT mass flow measurement with compensation, level measurement with compensation for gases, steam, and liquids**

- Dynamic compensation of pressure and temperature changes

**Proven sensor technology together with state-of-the-art digital technology**

- Large turn down ratio of up to 60:1

**Flexible configuration options**

- Local configuration via buttons on LCD indicator
- TTG (Through-The-Glass) keypad technology

**Comprehensive range of functions**

- Integrated counting function

# Introduction

**266CRH / 266CRT**

Thanks to their multisensor technology, these transmitters are capable of measuring three separate process variables at the same time and offer the option of calculating the following values:

- Mass flow for gases, steam, and liquids by means of dynamic compensation
- Standard volume flow for gases by means of dynamic compensation
- Heat flow for water and steam
- Drum water level and level measurement with density compensation of liquids

The differential pressure and absolute pressure are measured by two integrated sensors. The process temperature is measured by an external standard Pt100 resistance thermometer.

**Flow calculation**

The flow calculation carried out by these transmitters includes compensation of pressure and / or temperature as well as more complex variables such as discharge coefficient, thermal expansion, Reynolds number, and compressibility factor.

The 266CXX pressure transmitters include flow equations for superheated steam, saturated steam, gases, and liquids - so you only need one device for your system.

Multivariable transmitters represent a more economical solution than the designs that have been used for this type of measuring point up to now, in which three different transmitters for differential pressure, absolute pressure, and temperature report their values to a DCS, PLC, or flow computer.

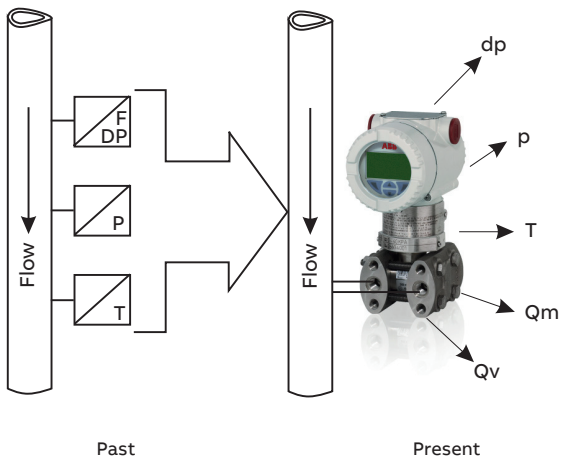


**Figure 1: Flow measurement - past and present**

The dynamic mass flow of the 266CXX is calculated using the following equation:

$$Qm \approx \frac{C}{\sqrt{1-\beta^4}} \cdot \varepsilon \cdot d^2 \cdot \sqrt{\rho_1 \cdot dp}$$

| | |
|---|---|
| Qm | Mass flow |
| C | Discharge coefficient |
| β | Diameter ratio |
| ε | Gas expansion factor |
| d | Inside diameter of the differential flow sensor |
| dp | Differential pressure |
| ρ | Density |

The flow calculation process is based on the following standards:

- AGA 3
- DIN EN ISO 5167

# … Introduction

**Flow coefficient**
The discharge coefficient is defined as the actual flow divided by the theoretical flow. It corrects the theoretical equation for the effect on the velocity profile (Reynolds number), assuming that no energy is lost between the pressure taps and pressure tap location.
It is dependent on the differential flow sensor, the diameter ratio, and the Reynolds number.
Compensation for the discharge coefficient ensures a high level of measuring accuracy for flow measurement with primary elements.

**Gas expansion factor**
The gas expansion factor corrects for density differences between pressure taps due to expansion of compressible media. It does not apply to liquids which are essentially non-compressible.
The gas expansion factor is dependent on the diameter ratio, the isentropic exponent, the differential pressure, and the static pressure of the medium.

**Diameter ratio**
The diameter ratio is dependent on the inside diameter of the differential flow sensor and the pipe diameter, which in turn are subject to temperature functions.
If the temperature of the medium being measured changes, the material of the process pipe and differential flow sensor expands or contracts.
The thermal expansion coefficients are dependent on the material of the pipe and differential flow sensor, and are used for calculating the change in diameters. This ensures a high level of flow accuracy in applications with low and high temperatures.

**Medium density**
The medium density has a direct effect on the flow calculation. The 266CXX pressure transmitters compensate for the medium density resulting from changes in temperature and / or pressure as follows:

- Gases as a function of p and T based on gas laws, taking compressibility factors into account; for natural gas, based on AGA 8 or SGERG
- Superheated steam as a function of p and T based on steam tables
- Saturated steam as a function of p based on steam tables
- Liquids as a function of T

**Mass flow calculations**
With the 266CXX pressure transmitters, mass flow calculations can be configured for the following differential flow sensors:

- Orifice corner pressure taps, ISO
- Orifice flange pressure taps, ISO
- Orifice D and D/2 pressure taps, ISO
- Orifice corner pressure taps, ASME
- Orifice flange pressure taps, ASME
- Orifice D and D/2 pressure taps, ASME
- Orifice flange pressure taps, AGA 3
- Orifice 2.5D and 8D pressure taps
- Small bore orifice, flange pressure taps
- Small bore orifice, corner pressure taps
- ISA 1932 nozzle
- Long radius nozzle wall pressure taps, ISO
- Long radius nozzle wall pressure taps, ASME
- Standard Venturi pipe, rough-cast inlet, ISO
- Standard Venturi pipe, machined inlet, ISO
- Standard Venturi pipe, welded inlet, ISO
- Standard Venturi pipe, rough-cast inlet, ASME
- Standard Venturi pipe, machined inlet, ASME
- Standard Venturi pipe, welded inlet, ASME
- Venturi, nozzle, ISO
- Pitot tube
- Wedge element
- Plus all non-standard flow sensors

ABB offers a complete range of differential flow sensors. We provide the full testing and documentation that your application needs. Whether the requirement is a single orifice plate with a simple Certificate of Conformity or a project requiring full material inspection, traceability, third-party verification, calibration and comprehensive data dossiers – ABB can satisfy all of the requirements.
In addition compact solutions are available, OriMaster, a compact orifice flowmeter, and PitoMaster, a compact pitot flowmeter.

**Level measurement**
The following functions are available for level measurement with pressure and temperature compensation:

- Level measurement with temperature compensation, on open tank
- Level measurement with pressure and temperature compensation, on closed tank, with and without diaphragm seal
- Fill volume measurement by means of tank shape specification
- Drum water level measurement

All of the functionality, including all the data required for compensated mass flow or for level measurement, is configured entirely using the PC-based DTM 266-MV.
A simplified setting method, which uses the (optional) LCD indicator, is available for flow and level calculation.

## General description

The diaphragm seal models described in this data sheet are combined with transmitters 266CRX. One or two diaphragm seals can be connected to the transmitter via a capillary tube.
The following models, which have different order codes, are available:

Models 266CRH and 266CRT for compensated mass flow measurement are designed with two diaphragm seals of the same type and size. In the case of compensated level measurement, they are designed with one or two diaphragm seals depending on the application.

The table below lists the standard types of remote seal that can be used together with transmitters 266CRX.
For specifications and details of the diaphragm seals, please refer to the corresponding diaphragm seal data sheet DS/S26.

Differential pressure transmitters with two diaphragm seals:

In all cases, the specifications below only apply to identical seal designs on both sides.

| Diaphragm seal model | Diaphragm seal type | Seal diaphragm size (thickness) | Mnemonic symbol |
|---|---|---|---|
| S26WA | Wafer diaphragm seal | 1.5 in / DN 40 | P1.5 |
| S26WE | (ASME and EN standards) | 2 in / DN 50 | P2 |
| | | 3 in / DN 80 | P3 |
| | | 1.5 in / DN 40 (thin) | F1.5 |
| | | 2 in / DN 50 (thin) | F2 |
| | | 3 in / DN 80 (thin) | F3 |
| S26FA | Flush diaphragm flanged seal | 2 in / DN 50 | P2 |
| S26FE | (ASME and EN standards; fixed and rotating flange) | 3 in / DN 80 | P3 |
| S26RA | | 4 in / DN 100 | P3 |
| S26RE | | 2 in / DN 50 (thin) | F2 |
| | | 3 in / DN 80 (thin) | F3 |
| | | 4 in / DN 100 (thin) | F3 |
| | Extended diaphragm flanged seal | 2 in / DN 50 | E2 |
| | (ASME and EN standards; rotating flange S26RA and S26RE only) | 3 in / DN 80 | E3 |
| | | 4 in / DN 100 | P3 |
| S26RJ | Flush diaphragm flanged seal | A 50 | P2 |
| | (JIS standards; rotating flange only) | A 80 | P3 |
| | | A 100 | P3 |
| S26RR | Flush diaphragm flanged seal | 1.5 in | P1.5 |
| | (ring joint in acc. with ASME standards; rotating flange) | 2 in | P2 |
| | | 3 in | P3 |
| S26CN | Flanged diaphragm seal, ‘chemical tee’ | 3 in | P3 |

# Functional specification

## Measuring range limits and span limits

### Differential pressure sensor

| Sensor code | Measuring range upper limit (URL) | Lower range limit (LRL) | Minimum measuring span |
|---|---|---|---|
| C | 6 kPa | −6 kPa | 0.6 kPa |
| | 60 mbar | −60 mbar | 6 mbar |
| | 24 in $H_2O$ | −24 in $H_2O$ | 2.41 in $H_2O$ |
| F | 40 kPa | −40 kPa | 0.67 kPa |
| | 400 mbar | −400 mbar | 6.7 mbar |
| | 160 in $H_2O$ | −160 in $H_2O$ | 2.67 in $H_2O$ |
| L | 250 kPa | −250 kPa | 4.17 kPa |
| | 2500 mbar | −2500 mbar | 41.7 mbar |
| | 1000 in $H_2O$ | −1000 in $H_2O$ | 16.7 in $H_2O$ |
| N | 2000 kPa | −2000 kPa | 33.3 kPa |
| | 20 bar | −20 bar | 333 mbar |
| | 290 psi | −290 psi | 4.83 psi |

### Absolute pressure sensor (second sensor)

| Sensor code | Measuring range upper limit (URL) | Lower range limit (LRL) | Minimum measuring span |
|---|---|---|---|
| 2 | 2000 kPa | 0 abs | 20 kPa |
| | 20 bar | | 0.2 bar |
| | 290 psi | | 2.9 psi |
| 3 | 10000 kPa | 0 abs | 100 kPa |
| | 100 bar | | 1 bar |
| | 1450 psi | | 14.5 psi |
| 4 | 41000 kPa | 0 abs | 410 kPa |
| | 410 bar | | 4.1 bar |
| | 5945 psi | | 59.5 psi |

# … Functional specification

## Span limits

Maximum measuring span = Measuring range upper limit (URL). For differential pressure measurements, can be adjusted up to ± URL (TD = 0.5) within the measuring range limits.

**Note**
To optimize performance characteristics, it is recommended that you select the transmitter sensor code with the lowest turn down ratio.

## Recommendation for square root function

At least 10 % of measuring range upper limit (URL)

## Zero position suppression and elevation

The zero position and span can be set to any value within the measuring range limits listed in the table if:

- already set span ≥ minimum span

## Temperature input

Process temperature range −200 to 850 °C (−328 to 1562 °F) with external resistance thermometer (Pt100) in four-wire circuit.

## Damping

Configurable time constant between 0 and 60 s.
This is in addition to the sensor response time.

## Warm-up time

Ready for operation as per specifications in less than 10 s with minimum damping.

## Insulation resistance

> 100 MΩ at 500 V DC (between terminals and ground)

# Operating limits

**Note**
See also data sheet DS/S26 for information on other possible restrictions based on diaphragm seal versions.

## Pressure limits

### Gauge pressure limits

The transmitter models 266CRX can operate without damage within the following overpressure limits:

| Sensors | Filling fluid | Gauge pressure limits |
|---|---|---|
| C to N | Silicone oil | 0.07 kPa abs., 0.7 mbar abs., 0.5 mm Hg<br>and 2 MPa, 20 bar, 290 psi<br>or 10 MPa, 100 bar, 1450 psi<br>or 41 MPa, 410 bar, 5,945 psi<br>depending on code variant selected |
| C to N | Fluorocarbon (Galden™) | 17.5 kPa abs., 175 mbar abs., 131 mmHg<br>and 2 MPa, 20 bar, 290 psi<br>or 10 MPa, 100 bar, 1450 psi<br>or 41 MPa, 410 bar, 5,945 psi<br>depending on code variant selected |

### Static pressure limits

The transmitter models 266CRX can operate within the specifications with the following overpressure limits:

| Sensors | Filling fluid | Static pressure limits |
|---|---|---|
| C to N | Silicone oil | 3.5 kPa abs., 35 mbar abs., 0.5 psia<br>and 2 MPa, 20 bar, 290 psi<br>or 10 MPa, 100 bar, 1450 psi<br>or 41 MPa, 410 bar, 5,945 psi<br>depending on code variant selected |
| C to N | Carbon fluoride (Galden™) | 17.5 kPa abs., 175 mbar abs., 2.5 psia<br>and 2 MPa, 20 bar, 290 psi<br>or 10 MPa, 100 bar, 1450 psi<br>or 41 MPa, 410 bar, 5,945 psi<br>depending on code variant selected |

The overpressure limits and upper static pressure limits can be lowered by means of the nominal pressure of the diaphragm seal flange; see remote seal data sheet DS/S26.

### Test pressure

The transmitters can withstand a pressure test with the following line pressure without leaking:

| Model | Test pressure |
|---|---|
| 266CRX | 1.5 × nominal pressure (static pressure limit) simultaneously on both sides* |

* Or double the value of the pressure sensor flange pressure rating, depending on which value is less. Meets hydrostatic test requirements of ANSI/ISA-S 82.03.

## Temperature limits °C (°F)

### Environment

This is the operating temperature.

| All models | Ambient temperature limits |
|---|---|
| Silicone oil | −40 and 85 °C (−40 and 185 °F) |
| Fluorocarbon (Galden™) | −40 and 85 °C (−40 and 185 °F) |

| All models | Ambient temperature limits |
|---|---|
| Integral LCD display* | −40 and 85 °C (−40 and 185 °F) |
| Viton® gasket | −20 and 85 °C (−4 and 185 °F) |
| PTFE gasket | −20 and 85 °C (−4 and 185 °F) |

* If may no longer be possible to read the LCD display clearly below -20 °C (-4 °F) and above 70 °C (158 °F).

**Note**
For applications in potentially explosive environments, the temperature range specified on the certificate / approval which depends upon the type of protection sought shall apply.

### Process

| All models | Process temperature limits |
|---|---|
| Silicone oil | −40 and 121 °C (−40 and 250 °F)* |
| Fluorocarbon (Galden™) | −40 and 121 °C (−40 and 250 °F)** |
| Viton® gasket | −20 and 121 °C (−4 and 250 °F) |
| PTFE gasket | −20 and 85 °C (−4 and 185 °F) |

* 85 °C (185 °F) for applications under 10 kPa, 100 mbar abs., 1.45 psia up to 3.5 kPa abs., 35 mbar abs., 0.5 psia

** 85 °C (185 °F) for applications below atmospheric pressure up to 17.5 kPa abs., 175 mbar abs., 2.5 psia

## ... Operating limits

The table below contains the specifications for diaphragm seal filling fluids when used in transmitters with (a) diaphragm seal(s).

| Filling fluid (application) | Process temperature and pressure limits | | | |
|---|---|---|---|---|
| | $T_{max}$ °C (°F) @ Pabs > than | $P_{min}$ mbar abs (mm Hg) | $T_{max}$ °C (°F) @ $P_{min}$ | $T_{min}$ °C (°F) |
| Silicone oil DC 200 10 cSt | 250 (480) @ 385 mbar | 0.7 (0.5) | 130 (266) | −40 (−40) |
| Silicone oil Baysilone PD5 5 cSt | 250 (480) @ 900 mbar | 0.7 (0.5) | 45 (123) | −85 (−121) |
| Fluorocarbon Galden G5™ (oxygen applications) | 160 (320) @ 1 bar | 2.1 (1.52) | 60 (140) | −20 (−4) |
| Silicone oil (high-temperature applications) | 375 (707) @ 1 bar | 0.7 (0.5) | 220 (328) | −10 (14) |
| Mineral oil Esso Marcol 122™ (food and beverage, sanitary applications) with FDA approval | 250 (480) @ 630 mbar | 0.7 (0.5) | 110 (230) | −6 (21) |

| Flushing ring gasket material | Process limits | | |
|---|---|---|---|
| | Pressure (max.) | Temperature | P x T |
| Garlock® | 6.9 MPa, 69 bar, 1000 psi | −73 and 204 °C (−100 and 400 °F) | 250000 (°F x psi) |
| Graphite | 2.5 MPa, 25 bar, 362 psi | −100 and 380 °C (−148 and 716 °F) | |
| PTFE | 6 MPa, 60 bar, 870 psi | −100 and 250 °C (−148 and 482 °F) | |

### Transport and storage

| Models 266Cxx – Transport and storage | |
|---|---|
| Ambient temperature range | −50 to 85 °C (−58 to 185 °F) |
| | With integrated digital display (LCD): −40 to 85 °C (−40 to 185 °F) |
| Relative humidity | Up to 75 % |

## Environmental limits

**Electromagnetic compatibility (EMC)**

In accordance with EN 61326
Overvoltage strength (with overvoltage protection): 4 kV (in accordance with IEC 1000-4-5 EN 61000-4-5)

**Pressure Equipment Directive (PED)**

Comply with 2014/68/UE to standards ANSI/ISA 61010-1:2012 following Sound Engineering Practice (SEP).

**Humidity**

Relative humidity: up to 100 %.
Condensation, icing: permitted.

**Vibration resistance**

Acceleration up to 2 g at frequencies of up to 1000 Hz (in accordance with IEC 60068-2-6).

**Shock resistance**

Acceleration: 50 g
Duration: 11 ms
(in accordance with IEC 60068-2-27).

**Humid and dusty atmospheres (IP rating)**

The transmitter is dust and sand-proof and protected against immersion effects in accordance with EN 60529 (2001) with IP 67 (IP 68 on request), by NEMA 4X, or by JIS C0920.

# Use in potentially explosive atmospheres

## Ex marking

Devices in hazardous atmospheres with or without integrated digital display.

For ambient temperatures −40 to 85 °C (−40 to 185 °F) the information based on the temperature classes in the associated certificates, must be complied with.
The temperature sensor circuit (Pt100) and the digital output (pulse / limit value output) must be connected in accordance with the requirements of the Ex certificate.

### ATEX / IECEx

| **Ex-marking** | |
|---|---|
| Type of protection | 'Ex d' – flameproof (enclosure) |
| **ATEX (Code E2)** | |
| II 1/2 G Ex db IIC T6 Ga/Gb Ta = −50 °C to +75 °C – IP67 | |
| II 1/2 D Ex tb IIIC T85°C Db Ta = −50 °C to +75 °C – IP67 | |
| **IECEx (Code E9)** | |
| Ex db IIC T6 Ga/Gb Ta = −50 °C to +75 °C – IP67 | |
| Ex tb IIIC T85°C Db Ta = −50 °C to +75 °C – IP67 | |
| Type examination certificate | **ATEX (Code E2)**<br>FM09AATEX0023X |
| | **IECEx (Code E9)**<br>IECEx FME 16.0002X |

| **Ex-marking** | |
|---|---|
| Type of protection | 'Ex n' – non-sparking and 'Ex t' – enclosure |
| **ATEX (Code E3)** | |
| II 3 G Ex nA nC IIC T6/T5/T4 nA Gc – IP67 | |
| II 3 D Ex tc IIIC T85°C Dc – IP67 | |
| **IECEx (Code ER)** | |
| Ex nA nC IIC T6/T5/T4 nA Gc – IP67 | |
| Ex tc IIIC T85°C Dc IP67 | |
| Type examination certificate | **ATEX (Code E3 )**<br>FM09AATEX0025X |
| | **IECEx (Code ER)**<br>IECEx FME 16.0004X |

### FM (USA and Canada)

| **Ex-marking** | |
|---|---|
| **Type of protection** | **Explosion proof** |
| Explosion proof (US): | |
| Class I, Div. 1, Groups A, B, C, D Ta = −50 to 85 °C | |
| Explosion proof (Canada): | |
| Class I, Div. 1, Groups A, B, C, D / T5 Ta = −50 to 85 °C | |
| Dust Ignition Proof: | |
| Class II/III, Div. 1, Groups E, F, G D Ta = −50 to 85 °C | |
| **Type of protection** | **Non-Incendive** |
| Class II/III, Div. 1, Groups E, F, G / T5 Ta = −50 to 85 °C | |
| **Type of protection** | **Energy limited** |
| Energy limited (US): | |
| Class I Zone 2, AEx nA nC IIC T6…T4 Ta = −50 to 85 °C | |
| Energy limited (Canada): | |
| Class I Zone 2, Ex nA nC IIC T6…T4 Ta = −50 to 85 °C | |
| **FM approvals** | USA (code ET)<br>FM16US0066X |
| | Canada (code ET)<br>FM16CA0036X |
| Type 4X, IP67 for all above markings. | |

### Combined ATEX, FM and IECEx approvals

Code EN = E2+E9+E3+ER+ET

# Electrical data and options

## Power supply

| Devices with Modbus communication | |
|---|---|
| Terminals | PWR + / PWR – |
| Supply voltage | 10.5 to 30 V DC |

The transmitter operates on terminal voltage of 10.5 to 30 V DC.
The quiescent supply current is 10 mA typically.
The transmitting supply current does not exceed 25 mA.

## Output signal

Modbus® RS 485 with 8 bit Remote Terminal Unit (RTU) data transmission.

| Modbus® interface | |
|---|---|
| Configuration (HART®-RS485) | Via an RS485 interface in connection with Asset Vision Basic (DAT200) a HART® communication DTM and a corresponding Device Type Manager (DTM) |
| Operating (Modbus® communication) | Modbus RTU – 2-wire half-duplex RS485 serial connection |
| Baud rate | 1200, 2400, 4800, 9600<br>Factory setting: 9600 bps |
| Parity | None, even, odd<br>Factory setting: none |
| Typical response time | < 100 milliseconds |
| Response delay time | 0 to 200 milliseconds<br>Factory setting: 50 milliseconds |
| Device address | 1 to 247<br>Factory setting: 247 |
| Register address offset | One base |

## LCD display

**Figure 2: LCD display (example)**

**Integral LCD display (code L1)**

- Wide screen LCD display, 128 × 64 pixel, 52.5 × 27.2 mm (2.06 × 1.07 in), dot matrix, multilingual.
- Four buttons for device configuration and management.
- Easy setup for quick commissioning.
- Customized visualizations which the user can select.
- Total value and actual value flow indication.

The display can also be used to show static pressure, sensor temperature, and diagnosis notice, as well as make configuration settings.

**Integral LCD display with TTG-(Through-The-Glass) operation (code L5)**
As with the integral LCD display above, but featuring an innovative TTG (Through-The-Glass) button technology which can be used to activate the device's configuration and management menus without having to remove the transmitter housing cover.
The TTG (Through-The-Glass) buttons are protected against accidental activation.

## Measuring accuracy

Stated at reference condition to IEC 60770:

- Ambient temperature of 20 °C (68 °F), relative humidity of 65 %, atmospheric pressure of 1013 hPa (1013 mbar).
- Mounting position with vertical diaphragm.
- Zero based range for transmitter with isolating diaphragms in AISI 316 L ss or Hastelloy, silicone oil fill and digital trim values equal to the span end points.

Unless otherwise specified, errors are quoted as % of span. Some performance referring to the Upper Range Limit are affected by the actual turndown (TD) as ratio between Upper Range Limit (URL) and calibrated span.

**Note**
IT IS RECOMMENDED TO SELECT THE TRANSMITTER SENSOR CODE PROVIDING THE TURNDOWN VALUE AS LOWEST AS POSSIBLE TO OPTIMIZE PERFORMANCE CHARACTERISTICS.

## Dynamic behavior

In accordance with IEC 61298-1

| Sensors | Time constant (63.2 % of total step response) |
|---|---|
| Sensors F to R | 150 ms |
| Sensor C | 400 ms |
| Sensor A | 1000 ms |
| 266CXX: Reaction time for all sensors | 70 ms |

Step response time (total) = reaction time + time constant

## Measuring error

% of calibrated span, consisting of terminal-based non-linearity, hysteresis, and non-repeatability.

| Model | DP sensor | For TD range | Measuring error |
|---|---|---|---|
| 266CRH with DF Mnemonic P3, F3, E3, F2 | C | From 1:1 to 5:1 | ±0.075 % |
| | C | From 5:1 to 10:1 | ±(0.015 × TD) % |
| | F to N | From 1:1 to 10:1 | ±0.075 % |
| | F to N | From 10:1 to 60:1 | ±(0.075 + 0.005 × TD − 0.05) % |
| 266CRH with DF Mnemonic different from above | C | From 1:1 to 5:1 | ±0.10 % |
| | C | From 5:1 to 10:1 | ±(0.02 × TD) % |
| | F to N | From 1:1 to 10:1 | ±0.10 % |
| | F to N | From 10:1 to 60:1 | ±(0.01 × TD) % |

| Model | DP sensor | For TD range | Measuring error |
|---|---|---|---|
| 266CRT with DF Mnemonic P3, F3, E3, F2 | C | From 1:1 to 5:1 | ±0.04 % |
| | C | From 5:1 to 10:1 | ±(0.008 × TD) % |
| | F to N | From 1:1 to 10:1 | ±0.04 % |
| | F to N | From 10:1 to 60:1 | ±(0.04 + 0.005 × TD − 0.05) % |
| 266CRT with DF Mnemonic different from above | C | From 1:1 to 5:1 | ±0.065 % |
| | C | From 5:1 to 10:1 | ±(0.013 × TD) % |
| | F to N | From 1:1 to 10:1 | ±0.065 % |
| | F to N | From 10:1 to 60:1 | ±(0.0065 × TD) % |

# … Measuring accuracy

### Recommendation for square root function

At least 10 % of upper measuring range limit (URL)

| Model | Pabs sensor (second sensor) | Measuring error |
|---|---|---|
| 266CXX | 1 to 3 | ±0.05 % |
| | 4 | ±0.075 % |

| Model | Process temperature measurement (Pt100) in acc. with IEC 60751 | Measuring error – Transmitter component |
|---|---|---|
| 266CXX | −200 to 850 °C (−328 to 1,562 °F) | ±0.3 K (0.54 °F) |

266CXX: The measuring accuracy of the mass or standard volume flow is not affected by the accuracy of the dp, p, and T measurement alone; rather, it also depends upon the primary device used (discharge coefficient), the pressure and temperature range to be compensated, as well as other parameters.
In typical applications, the flow measurement accuracy (without the primary device accuracy) is ±0.7 to 0.9 % of the mass flow.

### Ambient temperature

Per 20 K change within the limits of −40 to 85 °C
(per 36 °F change within the limits of −40 to 185 °F):

| Model | Sensor | For TD range | |
|---|---|---|---|
| 266CRH | C to N | 10:1 | ±(0.04 % URL + 0.06 % measuring span) |
| 266CRT | C to N | 10:1 | ±(0.03 % URL + 0.045 % measuring span) |

### Absolute pressure sensor

Per 20 K change between the limits of −40 to 85 °C
(−40 to 185 °F):
±(0.08 % URL + 0.08 % measuring span)

Limited to ±(0.1 % URL + 0.1 % measuring span) for the entire temperature range of 125 K within the limits −40 to 85 °C (−40 to 185 °F).

### Note

SEE DATA SHEET DS/S26 FOR ADDITIONAL TEMPERATURE EFFECTS ON THE DIAPHRAGM SEALS:

The total temperature effect can be defined as the combined influence of the factors referred to above on the transmitter plus the influence of the diaphragm seal, dependent upon the operating temperature.

### Static pressure

Models 266CRX (zero signal errors may be calibrated out at operating pressure)

| Measuring range | Sensors C, F, L, N |
|---|---|
| Zero signal error | Up to 100 bar: 0.05 % URL |
| | > 100 bar: 0.05 % URL/100 bar |
| Span error | Up to 100 bar: 0.05 % measuring span |
| | > 100 bar: 0.05 % measuring span / 100 bar |

### Electromagnetic field

Meets all requirements of EN 61326.

# Technical specification

**Note**
Please refer to the order information to check the availability of different versions of the relevant model.

## Materials

**Process separating diaphragms***
Stainless steel 1.4435 (AISI 316L);
Hastelloy C276®; Monel 400®;
Tantalum

A diaphragm seal with the required diaphragm material can be selected in this case too (as with the high pressure side).

**Process flanges, adapters, screw plugs, and vent / drain valves***
Stainless steel 1.4404 / 1.4408 (AISI 316L);
Hastelloy C276®; Monel 400®

**Screws and nuts**
Screws and nuts made from stainless steel AISI 316, class A4-70 as per UNI 7323 (ISO 3506) in compliance with NACE MR0175 Class II

**Seals***
Viton™ (FPM); Buna® (NBR); EPDM; PTFE; Graphite

**Diaphragm seal membrane material (high pressure side)***
Stainless steel AISI 316 L; Hastelloy C-276®;
Hastelloy C-2000®; Inconel 625®; Tantalum;
Stainless steel AISI 316 L or Hastelloy C-276® with non-stick coating;
Stainless steel AISI 316 L with anti-corrosion coating;
Stainless steel AISI 316 L, gold-plated;
Super duplex stainless steel (UNS S32750 in acc. with ASTM SA479);
Diaflex (AISI with anti-abrasion treatment)

**Extension material***
Stainless steel AISI 316 L (also for Diaflex-coated and gold-plated diaphragm); Hastelloy C-276®;
Stainless steel AISI 316 L or Hastelloy C-276® with the same coating as the diaphragm

**Diaphragm seal filling fluid**
Silicone oil DC200; silicone oil; fluorocarbon (Galden™);
Low-viscosity silicone oil Baysilone PD5;
Mineral oil Esso Marcol 122™

**Sensor filling fluid**
Silicone oil, fluorocarbon (Galden)

**Pressure sensor housing**
Stainless steel 1.4404 (AISI 316L)

**Electronics housing and cover**
Aluminum alloy (copper content ≤ 0.3 %) with baked epoxy finish (color RAL 9002);
Stainless steel AISI 316L.

**Cover O-ring**
Buna N® (Perbunan)

**Mounting bracket****
Galvanized C steel with chromium passivation;
Stainless steel AISI 316, AISI 316L

**Local zero point, measuring span, and write protection settings**
Fiber glass-reinforced polyphenylene oxide (removable)

**Plates**
Stainless steel (AISI 316) for transmitter name plate, certification plate, optional measuring point tag plate / settings plate fastened to the electronics housing, and optional tag plate with customer data.
All plates laser-labeled.

* Wetted parts of the transmitter.

** U-bolt material: Stainless steel AISI 400;
Screw material: high-strength alloy steel or stainless steel AISI 316

## Calibration

Standard:
0 to measuring range upper limit, for ambient temperature and atmospheric pressure
Optional:
To specified measuring span

# … Technical specification

## Surge protection

The 266 Modbus multivariable pressure transmitter comes standard with a surge / transient suppression scheme build into the termination block.

- Up to 4 kV on power supply
- Up to 2 kV on I/O
- Voltage: 1.2 µs rise time / 50 µs delay time at half value

## Optional accessories

**Mounting bracket**

For vertical and horizontal 60 mm (2 in) pipes or wall mounting

**LCD display**

Can be rotated in 90° increments into 4 positions

**Additional tag plates**

Code I2:
For measuring point tag (up to 30 characters) and calibration specifications (up to 30 characters: lower and upper value plus unit), attached to transmitter housing.
Code I1:
For customer data (4 lines with 30 characters each), attached to transmitter housing with wire.

**Certificates**

Test, design, characteristics, material traceability. Refer to **Ordering Information** on page 23.

**Name plate and operating instruction language**

Refer to **Ordering Information** on page 23.

## Process connections

**Flanges**

¼-18 NPT on the process axis

**Adapters**

½-14 NPT on the process axis

**Fastening screw threads**

$^{7}/_{16}$-20 UNF with 41.3 mm center distance

**Process connection via diaphragm seal**

See data sheet DS/S26

## Electrical connections

**Cable entry**

Two ½-14 NPT or M20 × 1.5 threaded bores for cable glands, directly on housing.

**Terminals**

- Two terminal for power (+ and –).
- Two terminals for RS485 communication.
- Four terminals for a Pt100 resistance thermometer with four-wire technology.

For wire cross sections of up to 2.5 mm$^2$ (14 AWG) and connection points for testing and communication purposes.

**Grounding**

Internal and external ground terminals are provided for 6 mm$^2$ (10 AWG) wire cross sections.

## Mounting position

The transmitters can be installed in any position.
The electronic housing can be rotated into any position. A stop is provided to prevent overturning.

## Weight

**Pressure transmitter without options or diaphragm seal**

Approximately 3.8 kg (8.4 lb);
Add 1.5 kg (3.3 lb) for housings made from stainless steel.

**Packaging**

Add 650 g (1.5 lb) for packaging.

## Packaging

Carton, dimensions depending on device design.

# Configuration

**Standard configuration**
Transmitters are calibrated at the factory to the customer's specified measuring range. The calibrated range and measuring point number are specified on a tag plate.
If this data has not been specified, the transmitter will be delivered with the plate left blank and the following configuration.

| Parameter | Value |
|---|---|
| Device mode | Operate (Modbus) |
| Device address | 247 |
| Multivariable calculation | No calculation |
| Software tag (max. 8 characters) | blank |
| Optional LCD display | PV (DP) in kPa; output in percent as bargraph display |
| | |
| (DP) Physical unit | kPa |
| (DP) Output scale 0% | 0 (LRL) |
| (DP) Output scale 100% | Upper Range Limit (URL) |
| Output | Linear |
| Damping | 0.125 s |
| | |
| (PS) Physical unit | MPa |
| (PS) Output scale 0% | 0 (LRL) |
| (PS) Output scale 100% | Upper Range Limit (URL) |
| Damping | 0.125 s |
| | |
| (T) Physical unit | °C |
| (T) Output scale 0% | −200 (LRL) |
| (T) Output scale 100% | +850 Upper Range Limit (URL) |
| Damping | 10 s |

Any or all of the configurable parameters listed above – including the lower and upper range values (with the same unit of measurement) – can easily be changed using a PC running the configuration software with the DTM for 266Cxx-Modbus.
Specifications concerning the flange type and materials, O-ring and vent / drain valve materials, and additional device options are stored in the transmitter database.

**Note**
For device functionality and simulation purpose a 178 Ω resistor (206 °C [402.8 °F]) and 2 jumpers are installed in the PT100 connection

# Mounting dimensions

### Transmitter with barrel housing

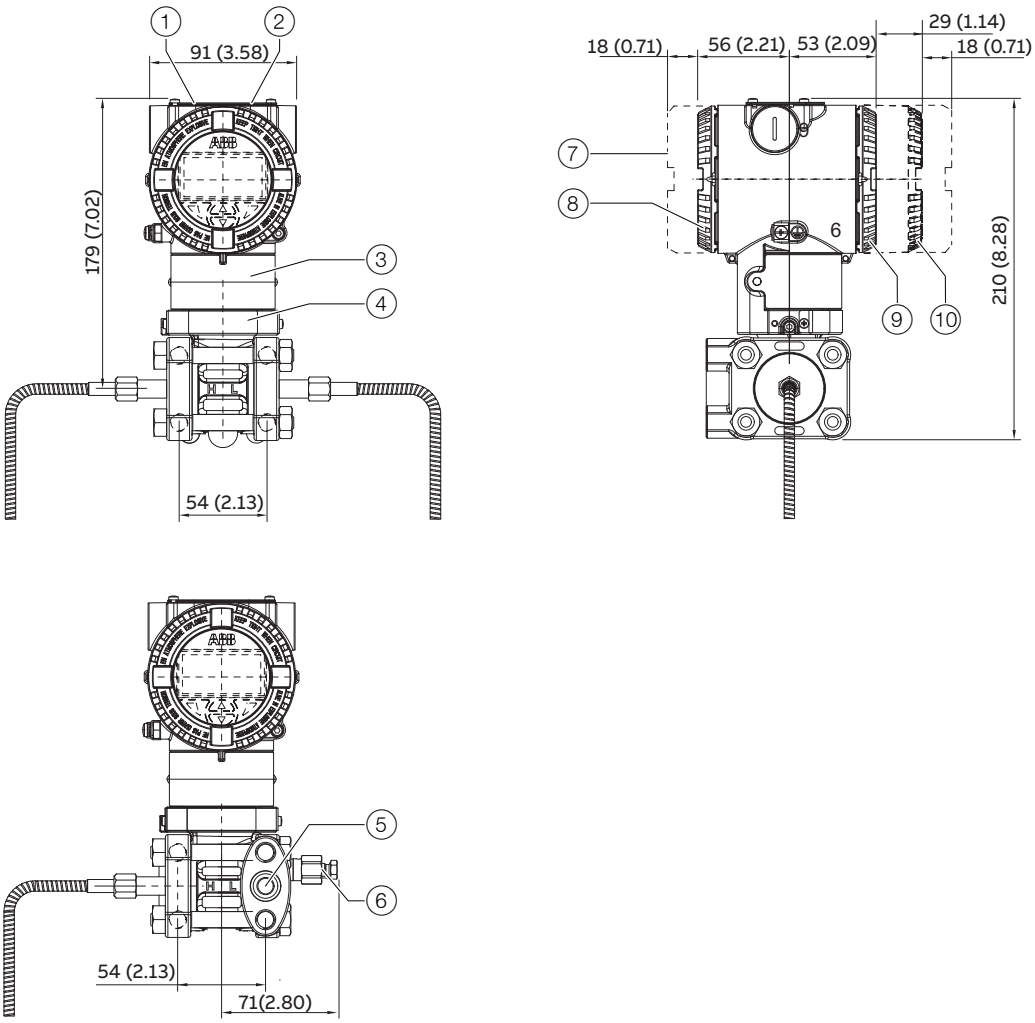


1. Push buttons
2. Name plate
3. Certification plate
4. Optional plate (code I2)
5. Process connection
6. Vent / drain valve
7. Space for removing the cover
8. Terminal side
9. Electronics side
10. LCD display housing cover

**Figure 3: Barrel housing, Dimensions in mm (in)**

**Transmitter with barrel housing and mounting bracket, for vertical or horizontal mounting on 60 mm (2 in) pipe**

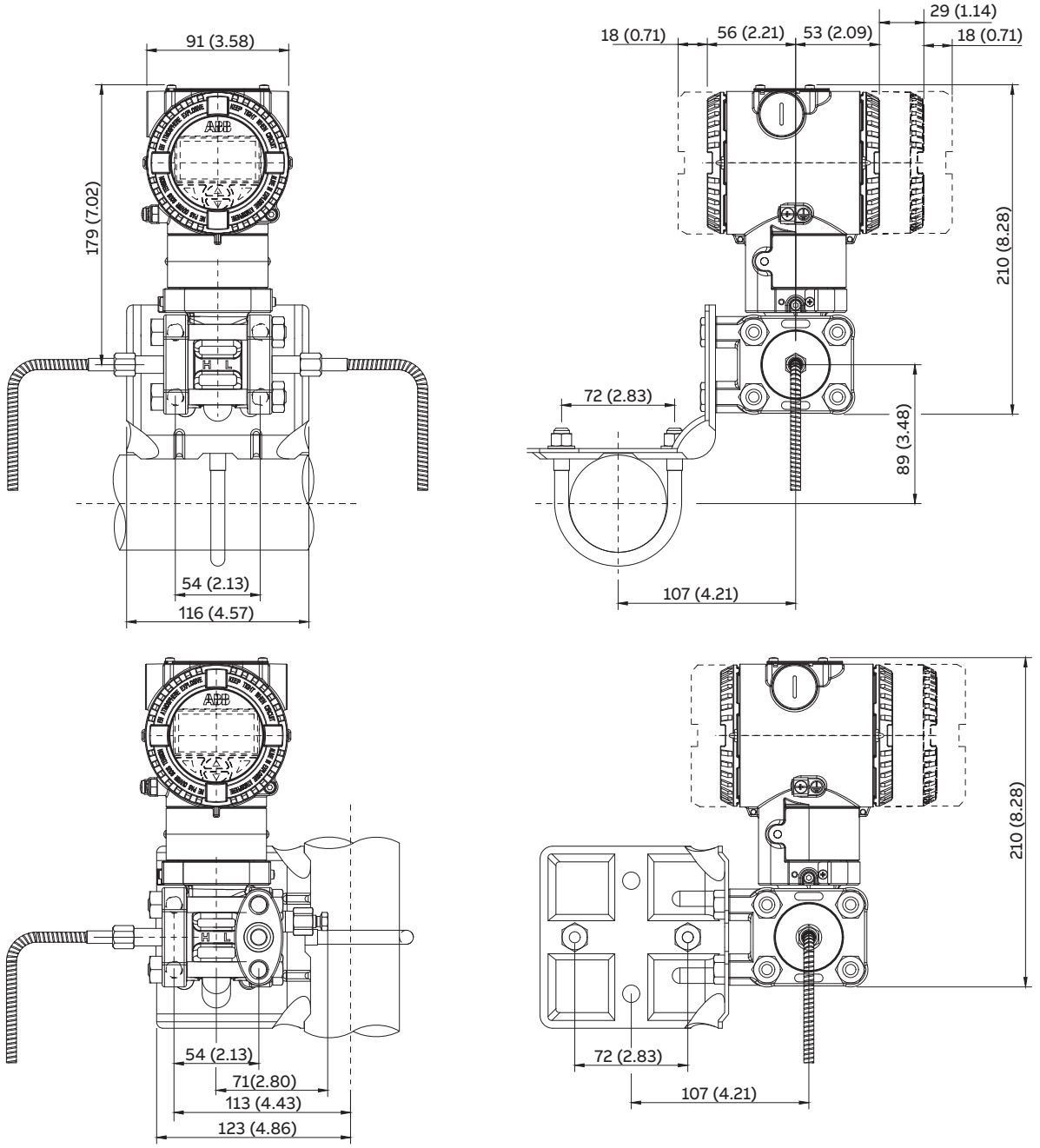


**Figure 4: Pipe mounting - barrel housing, Dimensions in mm (in)**

# … Mounting dimensions

**Transmitter with DIN housing and mounting bracket, for vertical or horizontal mounting on 60 mm (2 in) pipe**

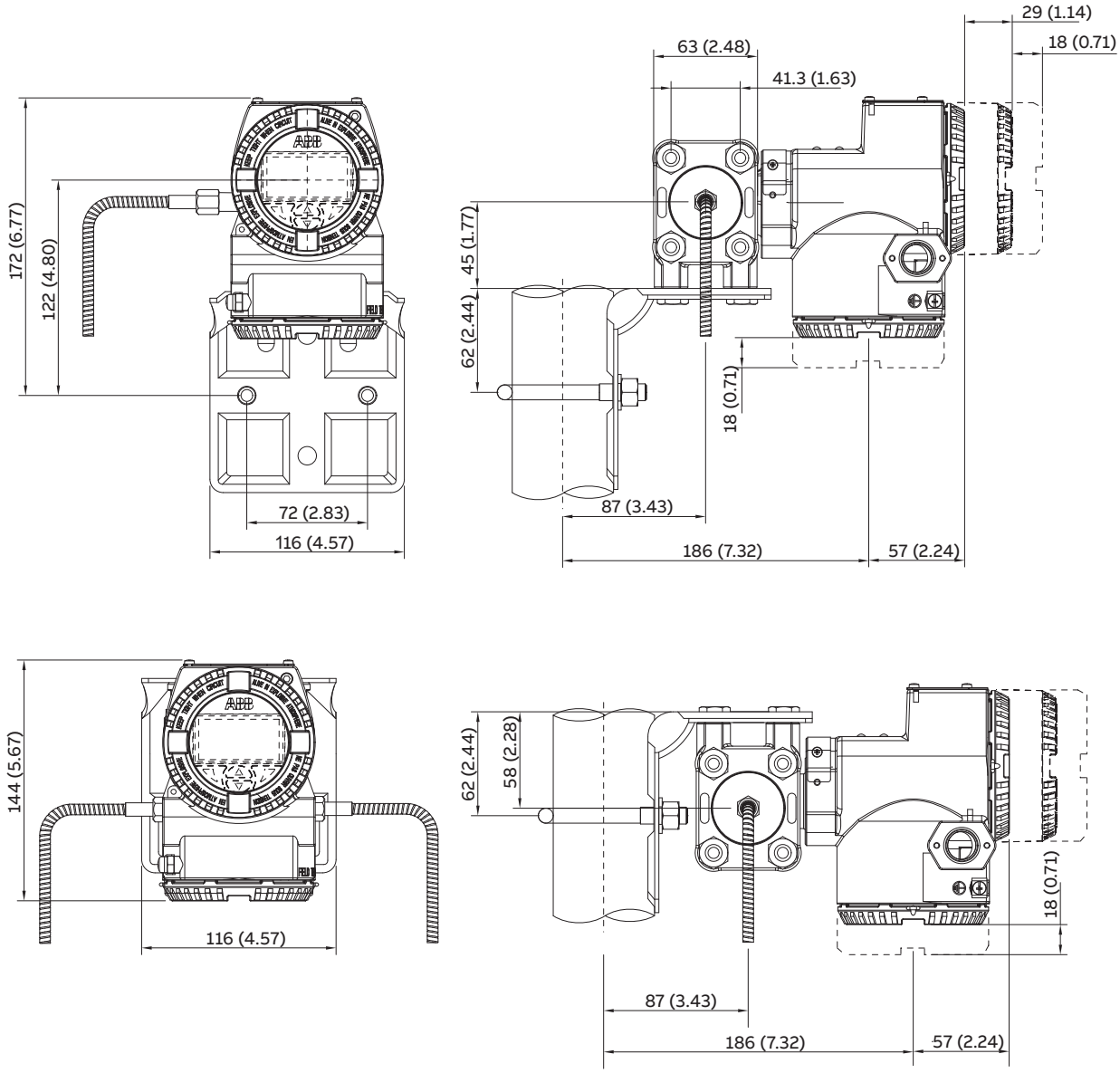


**Figure 5: Pipe mounting – DIN housing, Dimensions in mm (in)**

**Transmitter with barrel housing and flat bracket, for vertical or horizontal mounting on 60 mm (2 in) pipe**

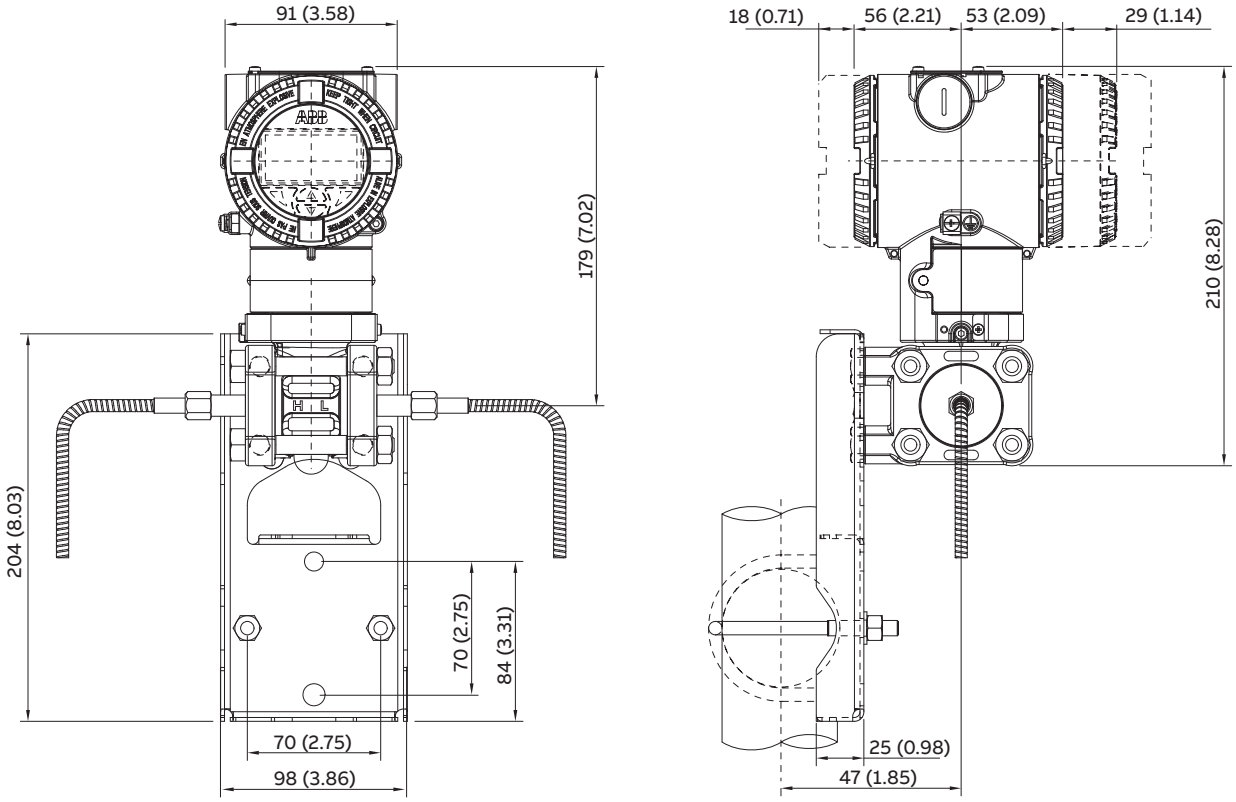


**Figure 6: Flat bracket for pipe mounting – barrel housing, Dimensions in mm (in)**

# Electrical connections

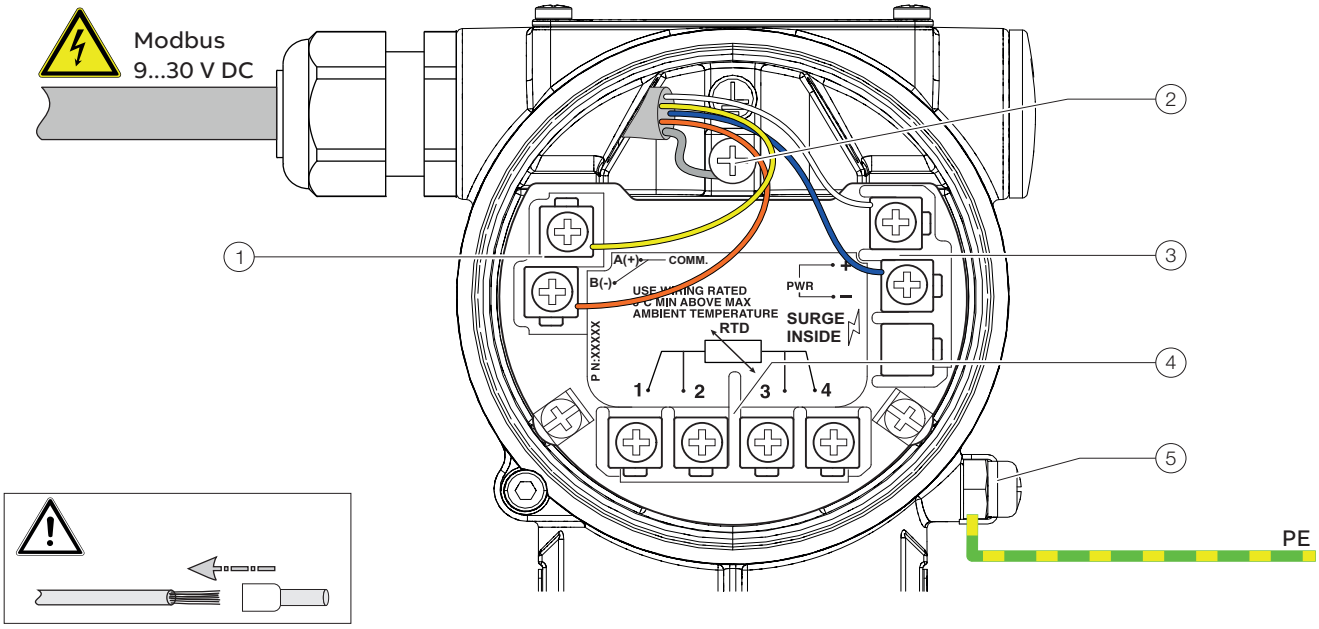


1. Terminals for Modbus® interface
2. Terminal for PE / Cable Shield
3. Terminals for power supply
4. Terminals for Pt100 resistance thermometer
5. Ground terminal

PE Potential equalization

**Figure 7: Connection on the device (example)**

# Ordering Information

## 266CRH and 266CRT

| | | | | | | | | |
|---|---|---|---|---|---|---|---|---|
| **Base model** | | | | | | | | |
| Multivariable transmitter with remote seal(s), for mass flow and level, base accuracy 0.075 % | **266CRH** | **X** | **X** | **X** | **X** | X | X | X |
| Multivariable transmitter with remote seal, for mass flow and level, base accuracy 0.04 % | **266CRT** | **X** | **X** | **X** | **X** | X | X | X |
| **Sensor Span Limits** | | | | | | | | |
| 0.6 and 6 kPa (6 and 60 mbar / 2.41 and 24 in $H_2O$) | | C | | | | | | |
| 0.67 and 40 kPa (6.7 and 400 mbar / 2.67 and 160 in $H_2O$) | | F | | | | | | |
| 4.17 and 250 kPa (41.7 and 2500 mbar / 16.7 and 1000 in $H_2O$) | | L | | | | | | |
| 33.3 and 2000 kPa (0.333 and 20 bar / 4.83 and 290 psi) | | N | | | | | | |
| **Maximum Working Pressure** | | | | | | | | |
| 0 and 2 MPa (0 and 20 bar / 0 and 290 psi) | | | 2 | | | | | |
| 0 and 10 MPa (0 and 100 bar / 0 and 1450 psi) (not with Sensor Span Limits code A) | | | 3 | | | | | |
| 0 and 41 MPa (0 and 410 bar / 0 and 5945 psi) (not with Sensor Span Limits code A) | | | 4 | | | | | |
| **Diaphragm Material / Fill Fluid** | | | | | | | | |
| AISI 316L SST (1.4435) / Silicone oil (NACE) | | | | S | | | | |
| Hastelloy C-276 / Silicone oil (NACE) | | | | K | | | | |
| Monel 400 / Silicone oil (NACE) | | | | M | | | | |
| Monel 400 gold-plated / Silicone oil (NACE) | | | | V | | | | |
| Tantalum / Silicone oil (NACE) | | | | T | | | | |
| AISI 316L SST (1.4435) / Inert fluid - Galden (Suitable for oxygen applications) (NACE) | | | | A* | | | | |
| Hastelloy C-276 / Inert fluid - Galden (Suitable for oxygen applications) (NACE) | | | | F* | | | | |
| Monel 400 / Inert fluid - Galden (Suitable for oxygen applications) (NACE) | | | | C* | | | | |
| Monel 400 gold-plated / Inert fluid - Galden (Suitable for oxygen applications) (NACE) | | | | Y* | | | | |
| Tantalum / Inert fluid - Galden (Suitable for oxygen applications) (NACE) | | | | D* | | | | |
| Diaphragm seal / Silicone oil (Seal to be quoted separately) | | | | R | | | | |
| Diaphragm seal / Inert fluid - Galden (Seal to be quoted separately) | | | | 2 | | | | |
| **Process Flanges and Adapters Material / Connection** | | | | | | | | |
| AISI 316L SST (1.4404 / 1.4408) / ¼-18 NPT female direct / horizontal connection (NACE) | | | | | A | | | |
| AISI 316L SST (1.4404 / 1.4408) / ½-14 NPT female through adapter / horizontal connection (NACE) | | | | | B | | | |
| AISI 316L SST (1.4404 / 1.4408) / ¼-18 NPT female direct (DIN 19212) / horizontal connection (NACE) | | | | | C | | | |
| Hastelloy C-276 / ¼-18 NPT female direct / horizontal connection (NACE) | | | | | D | | | |
| Hastelloy C-276 / ½-14 NPT female through adapter / horizontal connection (NACE) | | | | | E | | | |
| Monel 400 / ¼-18 NPT female direct / horizontal connection (NACE) | | | | | G | | | |
| Monel 400 / ½-14 NPT female through adapter / horizontal connection (NACE) | | | | | H | | | |
| AISI 316L SST (1.4404 / 1.4408) / For two seals construction (NACE) | | | | | R | | | |

* Suitable for Oxygen service

Continued see next page

# ... Ordering Information

| | | | | |
|---|---|---|---|---|
| **Base model** | | | | |
| Multivariable transmitter with remote seal(s), for mass flow and level, base accuracy 0.075 % | **266CRH** | **X** | **X** | **X** |
| Multivariable transmitter with remote seal, for mass flow and level, base accuracy 0.04 % | **266CRT** | **X** | **X** | **X** |
| **Bolts Material / Gaskets Material** | | | | |
| AISI 316L SST (NACE - non exposed) / Viton (Suitable for oxygen applications) | | 3* | | |
| AISI 316L SST (NACE - non exposed) / PTFE (Max. 25 MPa / 250 bar / 3625 psi) | | 4 | | |
| AISI 316L SST (NACE - non exposed) / EPDM | | 5 | | |
| AISI 316L SST (NACE - non exposed) / Perbunan | | 6 | | |
| AISI 316L SST (NACE - non exposed) / Graphite | | 7 | | |
| AISI 316L SST (NACE - non exposed) / Without gaskets (For two seals construction) | | R | | |
| **Housing Material / Electrical Connection** | | | | |
| Aluminium alloy (Barrel type) ½-14 NPT | | | A | |
| Aluminium alloy (Barrel type) M20 × 1.5 | | | B | |
| AISI 316L SST (Barrel type) ½-14 NPT | | | S | |
| AISI 316L SST (Barrel type) M20 × 1.5 | | | T | |
| **Output** | | | | |
| Modbus RS 485 / No additional options | | | | N |
| Modbus RS 485 / Options requested (to be ordered by Additional ordering code) | | | | 6 |

* Suitable for Oxygen service

## Additional ordering information for model 266CRH and 266CRT

| | | | | |
|---|---|---|---|---|
| Multivariable transmitter with remote seal(s), for mass flow and level, base accuracy 0.075 % | **266CRH** | **XX** | **XX** | |
| Multivariable transmitter with remote seal, for mass flow and level, base accuracy 0.04 % | **266CRT** | **XX** | **XX** | |
| **Vent and Drain Valve Material / Position** | | | | |
| AISI 316L SST (1.4403) / On process axis (NACE) | | | V1 | |
| AISI 316L SST (1.4403) / On flanges side top (NACE) | | | V2 | |
| AISI 316L SST (1.4403) / On flanges side bottom (NACE) | | | V3 | |
| Hastelloy C-276 / On process axis (NACE) | | | V4 | |
| Hastelloy C-276 / On flanges side top (NACE) | | | V5 | |
| Hastelloy C-276 / On flanges side bottom (NACE) | | | V6 | |
| Monel 400 / On process axis (NACE) | | | V7 | |
| Monel 400 / On flanges side top (NACE) | | | V8 | |
| Monel 400 / On flanges side bottom (NACE) | | | V9 | |
| **Explosion Protection Certification** | | | | |
| ATEX Group II Category 1/2 GD - Flameproof Ex d | | | | E2 |
| ATEX Group II Category 3 GD - Type of protection "N" Ex nL design compliance | | | | E3 |
| FM Approvals (USA and Canada) Explosion proof and Type „n“ | | | | ET |
| Combined ATEX, IECEx, FM Approvals (USA and Canada) | | | | EN |
| IEC Approval Group II Category 1/2 GD - Flameproof Ex d | | | | E9 |
| IEC Approval Group II Category 3 GD - Type of protection "N" Ex nL design compliance | | | | ER |

Continued see next page

| | | | | | | | |
|---|---|---|---|---|---|---|---|
| **Additional ordering information** | | | | | | | |
| Multivariable transmitter with remote seal(s), for mass flow and level, base accuracy 0.075 % | **266CRH** | **XX** | **XX** | **XX** | **XX** | **XX** | **XX** |
| Multivariable transmitter with remote seal, for mass flow and level, base accuracy 0.04 % | **266CRT** | **XX** | **XX** | **XX** | **XX** | **XX** | **XX** |
| **Integral LCD** | | | | | | | |
| With integral LCD display | | L1 | | | | | |
| TTG (Through The Glass) integral digital LCD display | | L5 | | | | | |
| **Mounting Bracket Shape / Material** | | | | | | | |
| For pipe mounting / Carbon steel (not suitable for AISI housing) | | | B1 | | | | |
| For pipe mounting / AISI 316 SST (1.4401) (not suitable for AISI housing) | | | B2 | | | | |
| For wall mounting / Carbon steel (not suitable for AISI housing) | | | B3 | | | | |
| For wall mounting / AISI 316 SST (1.4401) (not suitable for AISI housing) | | | B4 | | | | |
| Flat type bracket / AISI 316 SST (1.4401) (suitable for AISI housing) | | | B5 | | | | |
| **Operating Instruction Language** | | | | | | | |
| German | | | | M1 | | | |
| English | | | | M5 | | | |
| **Label and Tag Language** | | | | | | | |
| German | | | | | T1 | | |
| Italian | | | | | T2 | | |
| Spanish | | | | | T3 | | |
| French | | | | | T4 | | |
| **Additional Tag Plate** | | | | | | | |
| Supplemental wired-on stainless steel plate (4 lines, 32 characters each) | | | | | | I1 | |
| Laser printing of tag on stainless steel plate | | | | | | I2 | |
| Stainless steel tag, certifikation and wire-on plates | | | | | | I3 | |
| **Configuration** | | | | | | | |
| Standard pressure = in $H_2O$ / psi at 68 °F | | | | | | | N2 |
| Standard pressure = in $H_2O$ / psi at 39.2 °F | | | | | | | N3 |
| Standard pressure = in $H_2O$ / psi at 20 °C | | | | | | | N4 |
| Standard pressure = in $H_2O$ / psi at 4 °C | | | | | | | N5 |
| Custom | | | | | | | N6 |

# … Ordering Information

| | | | | |
|---|---|---|---|---|
| **Additional ordering information** | | | | |
| Multivariable transmitter with remote seal(s), for mass flow and level, base accuracy 0.075 % | **266CRH** | **XX** | **XX** | **XX** |
| Multivariable transmitter with remote seal, for mass flow and level, base accuracy 0.04 % | **266CRT** | **XX** | **XX** | **XX** |
| **Certificates** | | | | |
| Inspection certificate 3.1 acc. EN 10204 of calibration | | C1 | | |
| Inspection certificate 3.1 acc. EN 10204 of the cleanliness stage | | C3 | | |
| Inspection certificate 3.1 acc. EN 10204 of helium leakage test of the sensor module | | C4 | | |
| Inspection certificate 3.1 acc. EN 10204 of pressure test | | C5 | | |
| Declaration of compliance with the order 2.1 acc. EN 10204 for instrument design | | C6 | | |
| Separate calibration record | | CC | | |
| PMI test on wetted parts | | CT | | |
| **Material Traceability** | | | | |
| Inspection certificate 3.1 acc. EN 10204 of pressure-bearing and process wetted parts with analysis certificates as material verification | | | H3* | |
| Material certificate 2.2 acc. EN 10204 of the pressure bearing and process wetted parts | | | H4 | |
| **Connector** | | | | |
| With cable gland M20 × 1.5 | | | | U8 |

* Minor Parts with Factory Certificate acc. to EN 10204

## Standard delivery scope (changes possible with additional ordering code)

- Adapters supplied loose
- Sealing plug for horizontal connection flange on the process axis (if no remote seal is selected); no vent / drain valve
- For standard applications (without explosion protection)
- No display, no mounting bracket, no surge protector
- Multilanguage short operating instruction and English labelling
- Configuration with kPa and °C units
- No test, inspection, or material certificates

## Important remark for all models

The selection of suitable wetted parts and filling fluid for compatibility with the process media is a customer's responsibility, if not otherwise notified before manufacturing.

## NACE compliance information

1 The materials of constructions comply with metallurgical recommendations of NACE MR0175/ISO 15156 for sour oil field production environments. As specific environmental limits may apply to certain materials, please consult latest standard for further details. Materials AISI 316 / AISI 316L, Hastelloy C-276, Monel 400 also conform to NACE MR0103 for sour refining environments.

2 NACE MR0175 addresses bolting requirements in two classes:

**Exposed bolts**: bolts directly exposed to the sour environment or buried, encapsulated or anyway not exposed to atmosphere.

**Non exposed bolts**: the bolting must not be directly exposed to sour environments, and must be directly exposed to the atmosphere at all times.

266CRH, 266CRT bolting identified by ‘NACE’ are in compliance to the requirements of NACE MR0175 when considered ‘non exposed bolting’.

# Trademarks

Hastelloy is a registered trademark of Haynes International, Inc.

Monel is a registered trademark of Special Metals Corporation

Modbus is a registered trademark of the Modbus Organization

™ Viton is a DuPont de Nemours trademark

™ DC200 is a Dow Corning Corporation trademark

Galden is a Montefluos trademark

™ Halocarbon is a Halocarbon Products Co. trademark

Neobee M 20 is a Stepan Company trademark

™ Esso Marcol 122 is an Esso Italiana trademark

Syltherm is a Dow Chemical Company trademark

**Sales** **Service**

Castel Maggiore (BO) 40013
Via Lirone 60/i

e-mail: info@eurotecsrl.com
Tel: +39 051/6321595
Website: www.eurotecsrl.com

C.F.: 04103780377
P.I.: 01596581205

**ABB Limited**
**Measurement & Analytics**
Howard Road, St. Neots
Cambridgeshire, PE19 8EU
UK
Tel: +44 (0)870 600 6122
Fax: +44 (0)1480 213 339
Email: enquiries.mp.uk@gb.abb.com

**ABB Automation Products GmbH**
**Measurement & Analytics**
Schillerstr. 72
32425 Minden
Germany
Tel: +49 571 830-0
Fax: +49 571 830-1806

**ABB Inc.**
**Measurement & Analytics**
125 E. County Line Road
Warminster, PA 18974
USA
Tel: +1 215 674 6000
Fax: +1 215 674 7183

**ABB S.p.A.**
**Measurement & Analytics**
Via Luigi Vaccani 4
22016 Tremezzina (CO)
Italy
Tel: +39 0344 58111
Email: abb.instrumentation@it.abb.com

**abb.com/pressure**

We reserve the right to make technical changes or modify the contents of this document without prior notice. With regard to purchase orders, the agreed particulars shall prevail.
ABB does not accept any responsibility whatsoever for potential errors or possible lack of information in this document.
We reserve all rights in this document and in the subject matter and illustrations contained therein.
Any reproduction, disclosure to third parties or utilization of its contents – in whole or in parts – is forbidden without prior written consent of ABB.
Copyright© 2018 ABB
All rights reserved

3KXP400010R1001

DS/266CRH/CRT/MODBUS-EN Rev. B 11.2018