ABB MEASUREMENT & ANALYTICS | DATA SHEET

µFLO^{G5} (microFLO^{G5})

Basic flow computer

Overview

ABB introduced the µFLO (microFLO) in 2002. Since that time, the µFLO has become one of the most popular single run gas flow computers in North America. The µFLO^{G5} (microFLO^{G5}) is a direct replacement for the time proven µFLO/µFLO^{G4} flow computers.

The µFLO^{G5} is an extremely accurate, reliable flow computer with the capability to measure and monitor gas flow in compliance with AGA, API and ISO standards. These units are also expandable to provide additional communications and IO options. Backward compatibility is always of concern and this unit provides that as well.

The internal sensors and electronics are direct replacements for existing µFLOs. With low power, accuracy and system integrity built in, these devices are proven daily on thousands of sites. Totalflow products provide users the best opportunity for successful projects – site by site or system by system.

Description

The µFLO^{G5} includes an Integrated high accuracy digital Multivariable sensor (IMV) to measure both pressures and temperature. Two (2) versions of the sensor are available: one with differential pressure, static pressure and temperature for DP measurement applications, and one with static pressure and temperature for Linear measurement applications. The IMV is housed inside the flow computer enclosure and is characterized and calibrated at Totalflow's factory. Multi-tube capability is available in each unit and is easily invoked with a few configuration changes and interface connection to external transducers, either digital or analog.

The µFLO^{G5} features a powerful 300MHz AM3358 ARM Cortex A8 32 bit microprocessor and Linux operating system. The processor, memory, base IO and communications components are all on a single electronics board. The processing and memory capability of this device, allows the user to run more applications faster than ever before. Up to eight (8) differential measurement applications per RS-485 communications port when utilizing Modbus multivariable sensors (plus 1 tube type application utilizing the integrated sensor) are possible. The number of linear meter applications is limited by the available IO and device configuration. Additional "tube" or measurement applications are easily enabled with simple user or factory configuration.

In addition to the basic flow computer inputs (DP, SP and temperature), the standard device includes: one (1) digital output and one (1) digital input which can be configured as either a status input or high speed pulse accumulator input (up to 20 kHz).

A Communications + IO expansion board can be added to extend the hardware IO and communications capability.

Each unit is powered by an internal battery that can be solar charged (or other suitable DC supply) for remote unattended operation. Several charging options are available. The unit can also operate on an external power supply of 9 Vdc - 30 Vdc. When operating on external power supply, all IO and VBatt connections will operate at the supply power voltage.

Communications interface cables and equipment can be installed at the factory, ready for quick field installation. Checking and modifying configuration and calibration is accomplished with ABB's PCCU32 laptop software running on a 32-bit/64-bit Windows operating system.

In addition to the local configuration port, one communications port is supplied with the standard unit. This port is user software selectable for RS232/RS422 or RS485. An additional port may be added with the optional Com + IO expansion board. Available protocols include Totalflow native low power, Modbus RTU or ASCII, LevelMaster, as well as several others.

One integrated 10/100 Base-T Ethernet port for network connectivity is standard and a USB port for Flash download and local configuration is available as an option.

Features

- Low cost, high reliability design
- 300MHz AM3358 ARM Cortex A8 32 bit microprocessor
- Linux operating system (allows for a single software development environment for all G5 products)
- Integrated Ethernet 10/100 Base-T port (half/full duplex with full networking capabilities)
- USB host and USB device ports (ver 2.0): used for flashing new firmware and may be used for local configuration and collection
- µSD Card capability (future non-volatile memory expansion)
- Significant hardening against over-current / transients
- Positive temperature coefficient, resetting fuses and transient protection on
  - VBatt and SWVBatt outputs
    - Digital outputs
    - Battery charger input
- Base IO on µFLO^{G5} electronics board
  - One (1) Digital Input (may be used as hi-speed PI input)
  - One (1) Digital Output
- Battery voltage (factory calibrated for true voltage reading)
- Charger voltage (factory calibrated for true voltage reading)
- Low power design
- Aluminum powder coated enclosure (3R)
- Flexible accommodation of communications hardware
- Cost effective communications kits
- Stable time base (accurate integration)
- User selectable simple dual level security code data protection or enhanced user configurable Role Based Access Control (RBAC)
- Rechargeable, lead acid batteries with Solar, AC or DC charging options. Can also operate on 9 Vdc to 30 Vdc external power supply (without battery option only). User can enter date when batteries are installed and expected battery life. µFLO^{G5} will warn when expected life is reached. Can be used as an asset management tool. (below)

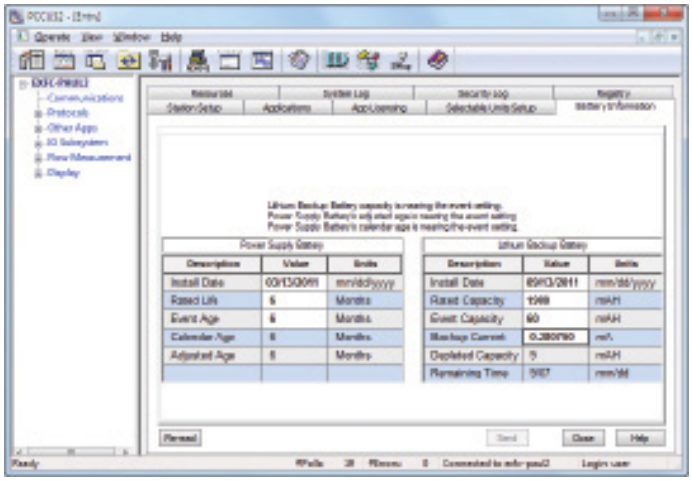

Fig. 1 Software/asset management tool

Custody transfer applications

- Monitors user limits for detection, and reporting of abnormal conditions
- Defaults to 40 days of hourly and 50 days of daily data – user configurable
- Defaults to 200 events – user configurable
- Complies with latest version of API 21.1and API 21.2 standards for custody measurement devices
- Flow and energy calculations per AGA3-85, AGA3-92, AGA3-2012, AGA-7, AGA-5, ISO 5167, API 11.1, API 11.2.2, API 11.2.4 and API 11.4.1
- Meets flow computer requirements as stated in AGA Report No. 9, “Measurement of Gas by Multi-path Ultrasonic Meters”
- Super compressibility calculations per NX-19, AGA8-92 gross or detail, ISO 12213
- Smart (temperature and pressure compensated) integral, fac- tory calibrated, multivariable transducer (IMV)
- All calculations performed once per second
- Standard “High Speed Chart” graphics for each run showing DP/Counts, static pressure, temperature, and flow rate.
- Flow retention during user transducer calibration
- Selectable 3 or 5 point user calibration of Analog Inputs
-
-
- User definable DP no flow cut-off
- 100 ohm platinum RTD resistance curve fit with user programmable single point offset or 3/5 point user calibration for RTD input
- Hazardous Area Certification: CSA C/US; ATEX and IECEx
- Real time clock that continues running on lithium battery if main power is removed
- Advanced embedded data logger (Trending); Frequency of sampled data for trending is user configurable
- Programmable alarm filtering
- Exception reporting capability
- Multiple protocol options including Totalflow packet protocol, various Modbus protocols and others
- User programmable Modbus register maps (both slave and master)
- User programmable math and logic sequences
- Multi-run measurement capability. One run measurement utilizing IMV, up to eight (8) additional runs per com port using MODBUS multivariable sensors.
- Sensor with housing and main electronics board are individually field replaceable. No longer necessary to replace the entire IMV in the event of a failure. All factory sensor calibration data is retained in a small electronics board that is part of the sensor and housing.

Hardware modularity

Hardware functionality of µFLO^{G5} devices can be extended by adding an optional expansion board.

Communications + IO expansion board includes:
- One (1) communications port.
- User selectable for RS232/RS422 or RS485
- One (1) DO
- One (1) DI/PI (supports up to 20 kHz)
- Two (2) Analog Inputs (4-20 mA or 1-5 Vdc)

Software modularity

The software design represents significant modularization through use of object oriented design principles. This allows a flexible and stable real time environment. Totalflow supplied objects (applications) can be enabled in our factory or by the user, one or more times on the same device. It is this framework that allows the support for multi-tube measurement.

Supported software applications continually grow. A sample of standard applications include:
- AGA3 orifice meter run
- ISO 5167 orifice meter run
- VCone meter run
- AGA7 meter run (rotary/turbine/ultrasonic)
- Coriolis gas application
- Liquid measurement (linear): Oil, light hydrocarbon, or water
- Real-time data logger (trending)
- RAMS (alarming, exception reporting)
- Operators (simple custom math / logic)
- Selectable Units (user selectable engineering units)
- Tank level application
- Therms master application (host polling for gas quality)
- Therms slave application (slave receiving gas quality)
- NGC Client (Ethernet connection to NGC for gas quality)
- XMV (Modbus multivariable) Interface (for multiple DP meter runs)
- Multiple protocols (Totalflow native low power, Modbus slave (binary/ASCII), Modbus master (binary/ASCII), Enron Modbus, LevelMaster, ABB 266 XMV Multivariable)

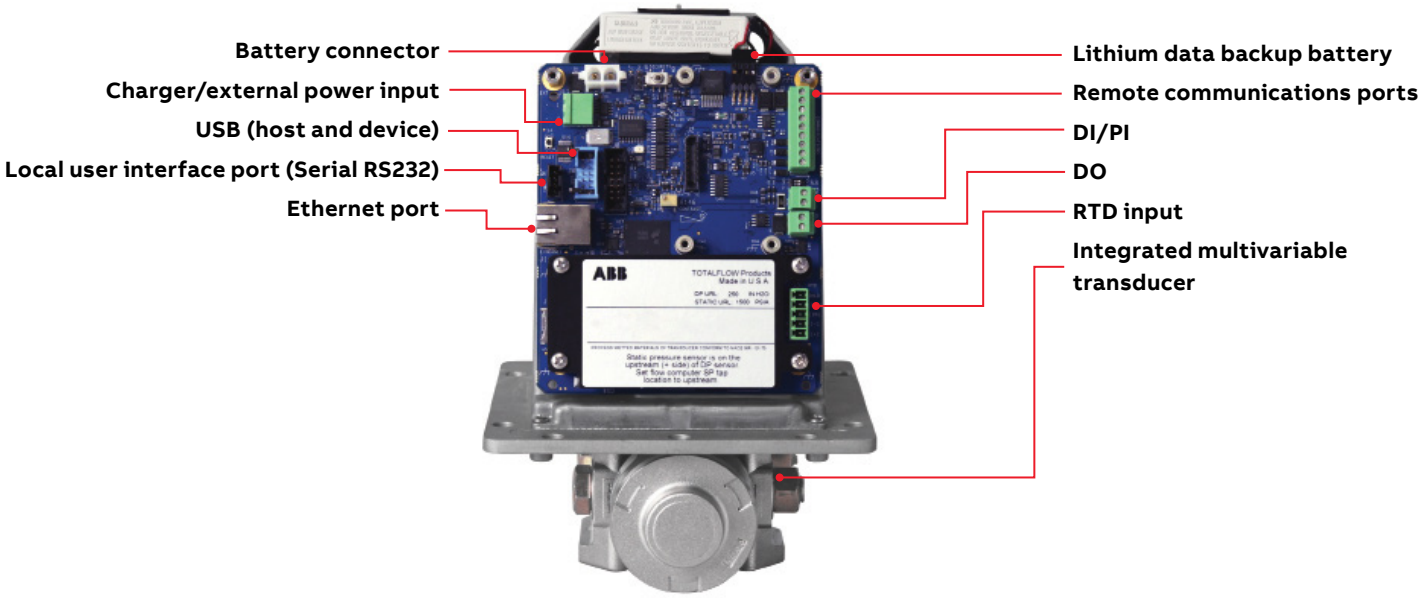

Fig. 3 IMV^{G5}

General specifications

Dimensions
Width: 12.76 in. (324.00 mm) x Height: 17.81 in. (452.40 mm)

Installed depth
Pipe mount: 11.58 in. (294.23 mm)
Wall mount: 11.02 in. (279.88 mm)

Weight (without battery)
Approx 15.1 lbs. (5.64 kg)

Max battery capacity
26AH

Enclosure
Powder coated aluminum; Type 3R

Mounting
Wall, pipe, or direct

Operating temperature (ambient)
-40 to 185°F (-40 to +85 °C)
Note: see Certification (Hazardous location classification)

Humidity
0 – 95% non-condensing

Certification (Hazardous location classification)
- CSA C/US Class 1, Division 2, Groups C & D T3 -40°F (40°C) to +140°F (+60°C), (-40°F (40°C) to +185°F (+85°C) temperature rating without battery or radios)
- ATEX Zone 2, Sira 10ATEX4138X, II 3G Ex nA IIB T3
- Ta = -40°C to +60°C (meets European Union Directive 94/9/EC)
- IECEx CSA09.0013X, Ex nA IIB T3 (-40°C ≤ Tamb ≤ +60°C)

Power
Auto detect circuitry to determine if battery powered or external power supplied. 9 VDC to 30 VDC maximum. Exceeding 30 VDC will damage the device.

Charger
Solar or 15 VDC, 30 Watt maximum: connected to J17

Current draw
- Basic single differential measurement application without communications enabled: ~33.9mA @ 13.8 V (~468mW)
- Basic single differential measurement application with ethernet enabled: ~46.4mA @ 13.8 V (~640mW)

Memory
- Linux operating system
- Programs/Applications/Data storage 16 GB of solid state persistent memory. 256 MB of LPDDR RAM for program execution. Lithium battery NOT required to maintain programs /applications or data.
- µSD (future applications)

LCD interface
Dedicated interface for 2 X 24 Liquid Crystal Display (LCD)

Security switch
On/Off dual-level on-board security switch; also supports enhanced Role Based Access Control (user configurable, multi-level, multi-user security)

Time base stability
± 7.5 ppm (parts per million)

IO scan rate
1 time per second (1 Hz)

AGA3/AGA7/ISO5167/VCone calculations
- Calculations are tested and verified to be within ± 50 ppm (parts per million) as stated in API 14.3.4
- Liquid Calculations verified within 8 significant digits per API 11.1.5

Communications ports (One (1) additional RS232/RS422/RS485 user selectable port with optional expansion board)
- 1 - dedicated – PCCU (Local Configuration Port)
- 1 - RS232/RS422/RS485 user software selectable (baud rates up to 115,200). Software selectable termination for RS-485/RS-422
- 1 - USB 2.0 Host port - optional
- 1 - USB 2.0 Device port - optional
- 1 - 10/100 Base-T Auto MDIX, no crossover cable required. (Half/Full Duplex) Ethernet port. May be used as high speed local port or network port.

IO expansion board (Optional)
- 1 RS232/RS422/RS485 com port
- 1 DI/PI
- 1 DO
- 2 AI

General specifications continued

EMC requirements

Emissions: European regions per EN 61000-6-3: 2006: Residential locations:

Radiated: 30-1000MHz, 1-6GHz, Class B limits
Conducted: (Telecomm port): 0.15-30MHz, Class B limits

Emissions: North America & other regions:

- CFR 47, Part 15, Subpart B, Class B, FCC emissions
- ICES-003 Issue 4 CAN/CSA-CEI/IEC CISPR 22:02, Class B ITE emissions
- AS/NZS CISPR 22-2009 (Australia/New Zealand)

Immunity per EN 61000-6-2: 2005: Industrial locations:

- EN61000-4-2: Electrostatic Discharge, Criterion A1, 8kV Air, 4kV Contact
- EN61000-4-3: Radiated Immunity, Criterion A1, 80MHz-2.7GHz 10V/m
- EN61000-4-4: Fast Transients, Criterion A1, 1kV DC & Signal
- EN61000-4-6: Conducted Immunity, Criterion B2, 0.15-80MHz 10Vrms
- EN61000-4-8: Magnetic Fields, Criterion A1, 10A/m 50/60Hz

Note 1: No degradation of performance or loss of function.
Note 2: Temporary degradation of performance in which signals deviate during disturbance but self-recover when disturbance is removed.

Digital inputs/Pulse inputs

One (1) standard on main board. One (1) additional on optional expansion board

Input is configurable as active or passive with optional software de-bounce.

- Open circuit voltage: 5 Vdc (Internally pulled up to 5 Vdc nominal)
- Short circuit leakage current: - 395 uA typical input capacitance: 0.1 uF typical
- Maximum allowable voltage range on input: - 0.5 Vdc to 30 Vdc
- Maximum frequency input 100 Hz @ 50% duty cycle with de-bounce enabled
- Maximum frequency input 10 KHz @ 50% duty cycle with de-bounce disabled
- Dry contact (Form A), Open Collector or Active Voltage
- Minimum contact resistance to activate input: 1000
- Voltage threshold to deactivate the input: 3.1 V (referenced to GND terminal)
- Voltage threshold to activate the input: 0.5 V (referenced to GND terminal)
- Conductor pairs must be shielded to prevent spurious signals

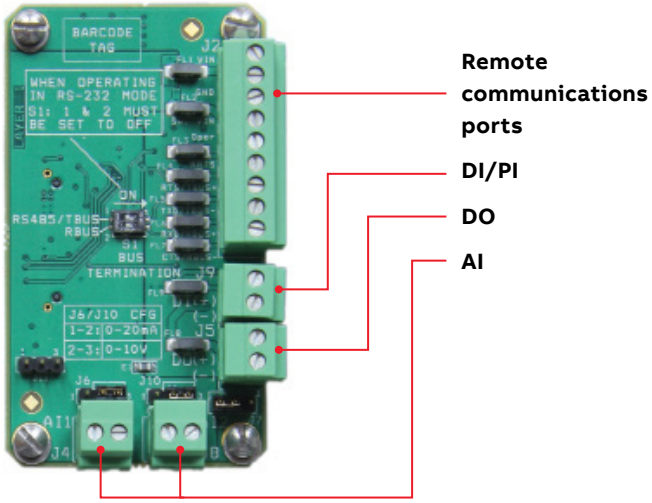

Fig. 4 Daughter card

Digital outputs

One (1) standard on main board. One (1) additional on optional expansion board

Open drain FET (non-isolated)

- Open circuit voltage: 0 Vdc
- Short circuit leakage current: 0 uA typical
- Output capacitance: 1000 PF typical
- Maximum allowable voltage range on output: 0 Vdc to 30 Vdc
- Open drain FET type
- 'ON' resistance: 0.22 Ω typical (including PTC fuse resistance)
- Maximum pulse current: 3 A for 5 seconds
- Maximum continuous sink current: 1.85 A @ 23°C; 1A @ 70°C; 0.85A @ 85°C

Analog inputs (optional)

Two (2) on the Com + IO expansion board

Voltage mode: (each point)

- Input impedance ≥ 400KΩ; Drift = ± 0.0053%/°C
- Maximum measurable Input Voltage = 20V
- Resolution = 0.615mV/Bit (12.99 Bits from 0-5V)

Current mode: (each point)

- Input impedance 255Ω; Drift = ± 0.008%/°C
- Maximum measurable input current = 44 ma (limited by power dissipation)
- Resolution = 2.4µA/Bit (12.7 Bits from 4 - 20 mA)

Sales Service Software

Integral Multivariable (IMV^{G5}) specifications

Multivariable unit

Temperature limits
Compensated -40 to 160°F (-40 to 71.1°C)
Operational 1 -40 to 185°F (-40 to 85°C)
Storage -40 to 185°F (-40 to 85°C)

Resolution
24 Bit maximum resolution (0.000012% FS) (0.0012% FS effective signal resolution)

Vibration performance
1.5 INW per G (2G maximum) at 1 Hz, decreasing to zero at 1KHz in straight line mode

Mounting specification
Change from perpendicular (front to back / around X-axis) ≤ 0.5% of URL (Can be corrected with calibration)

Reference conditions
Temperature at most recent factory or user calibration; Static Pressure and Differential Pressure < 100% of URL

Static pressure

Accuracy
± 0.075% of user calibrated spans from 20% (including linearity, hysteresis, & repeatability at reference conditions) to 100% of URL

Ambient temperature effect (within the Operational Temperature Limit)
± 0.075% of URL ± 0.06% of Reading

Stability (for 12 months)
± 0.1% of URL when operated in the compensated thermal band and ≤ 100% of the stated static and differential pressure ranges

Differential pressure (differential version only)

Accuracy (including linearity, hysteresis, & repeatability at reference conditions)
± 0.075% of user calibrated spans from 20% to 100% of URL

Ambient temp. effect (within the operational temp. limit)
± 0.075% of URL ± 0.06% of reading

Stability (for 12 months)
± 0.1% of URL when operated in the compensated thermal band and ≤ 100% of the stated static and differential pressure ranges

Static pressure effect (DP Zero)
± 0.03% of URL per 1500 PSI (3200 PSI maximum)

Static pressure effect (DP Span)
± 0.1% of reading per 1500 PSI (3200 PSI maximum)

Temperature

Process range
-80 to +750°F (-62 to 399°C)

Accuracy (as shipped from factory)
± 0.35°F (± 0.2°C) over operating range

Accuracy (after single point field calibration)
± 0.2°F (± 0.12°C) repeatability over operating range

Available ranges

µFLO^{G5} (differential IMV)

	DP (inches H_2O)			
AP (psia)		**500**	**1500**	**3200**
	250	✓	✓	**Future**
	800	✓	✓	**Future**

µFLO^{G5} (linear IMV)

AP (psia)	100	500	1500	3000 (future)

IMV sensors

Single seal rated (ANSI/ISA 12.27.01)
- DP/SP sensor PMax = 3000 psi
- Wetted materials meet NACE MR0175/ISO 15156
- Process fluids: -62°C to 110°C

See 'Certification (Hazardous location classification)' for additional information concerning operational temperature limits based on certifications.

Castel Maggiore (BO) 40013
Via Lirone 60/i

e-mail: info@eurotecsrl.com
Tel: +39 051/6321595
Website: www.eurotecsrl.com

C.F.: 04103780377
P.I.: 01596581205

—

ABB Inc.
Measurement & Analytics
Quotes: totalflow.inquiry@us.abb.com
Orders: totalflow.order@us.abb.com
Training: totalflow.training@us.abb.com
Support: totalflowsupport@us.abb.com
+1 800 442 3097 (opt. 2)

Main Office
7051 Industrial Boulevard
Bartlesville, OK 74006
Ph: +1 918 338 4888

www.abb.com/upstream

California Office
4300 Stine Road
Suite 405-407
Bakersfield, CA 93313
Ph: +1 661 833 2030

Kansas Office
2705 Centennial Boulevard
Liberal, KS 67901
Ph: +1 620 626 4350

Texas Office – Odessa
8007 East Business 20
Odessa, TX 79765
Ph: +1 432 272 1173

Texas Office – Houston
3700 West Sam Houston
Parkway South, Suite 600
Houston, TX 77042
Ph: +1 713 587 8000

Texas Office – Pleasanton
150 Eagle Ford Road
Pleasanton, TX 78064
Ph: +1 830 569 8062

—

We reserve the right to make technical changes or modify the contents of this document without prior notice. With regard to purchase orders, the agreed particulars shall prevail. ABB does not accept any responsibility whatsoever for potential errors or possible lack of information in this document.

We reserve all rights in this document and in the subject matter and illustrations contained therein. Any reproduction, disclosure to third parties or utilization of its contents – in whole or in parts – is forbidden without prior written consent of ABB.

© Copyright 2017 ABB.
All rights reserved.

DS/2102800-EN – Rev. B 05.2017