Data sheet DS/2102789-EN

Transmitter mounting brackets
266 pressure and multivariable transmitters

Introduction

ABB offers a selection of brackets for mounting all of your multivariable and pressure transmitters. This datasheet will allow you to easily select the correct part number for your application. Once you know the type of pressure transmitter, the bracket metal type, and the transmitter orientation, these drawings and the chart will help you know you're getting what you need.

EUROTEC
TECNOLOGIE IMPIANTISTICHE - AUTOMAZIONE - TELECONTROLLO

Transmitter mounting brackets
266 pressure and multivariable transmitters

Mounting bracket models

Part number	Material	Orientation	Vertical flanges without manifold	Vertical flanges with manifold	Horizontal flanges without manifold	Horizontal flanges with manifold	HSH
2105621-001	Stainless	90°	✓	✓			
2105620-001 (B1)	Carbon	90°	✓		✓	✓	
2105620-002 (B2)	Stainless	90°	✓		✓	✓	
2105620-005 (B5)	Stainless	Flat	✓		✓	✓	
2105620-006 (B6)	Carbon	90°					✓
2105620-007 (B7)	Stainless	90°					✓
2100900-002 (B8)	Aluminum	90°	✓		✓	✓	

2105621-001

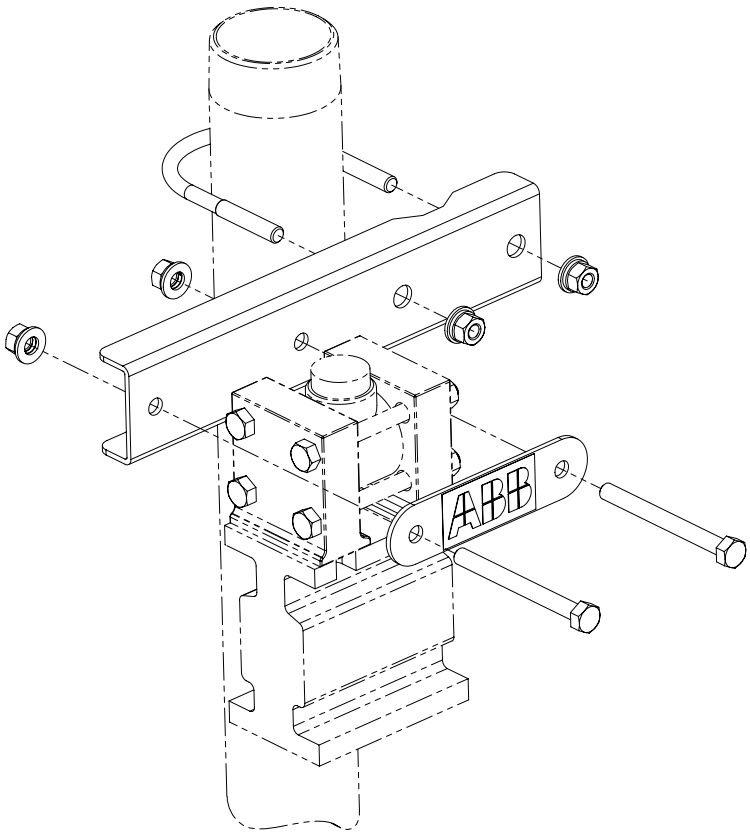

2105620-001 (B1) and 2105620-002 (B2)

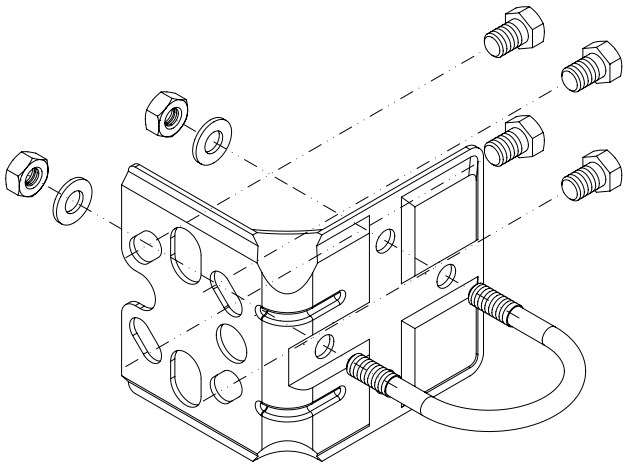

2105620-005 (B5)

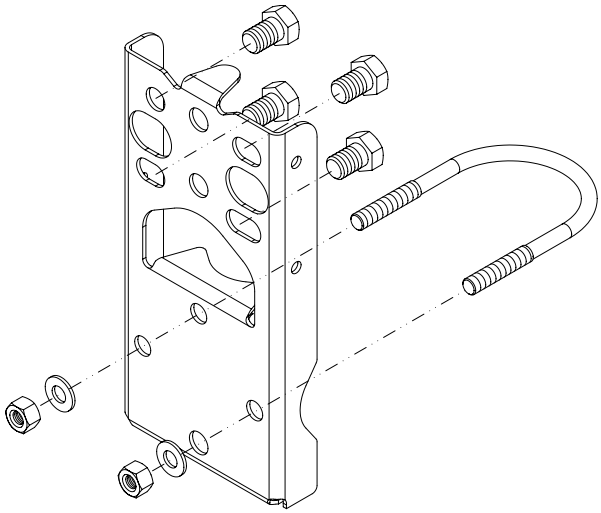

2105620-006 (B6) and 2105620-007 (B7)

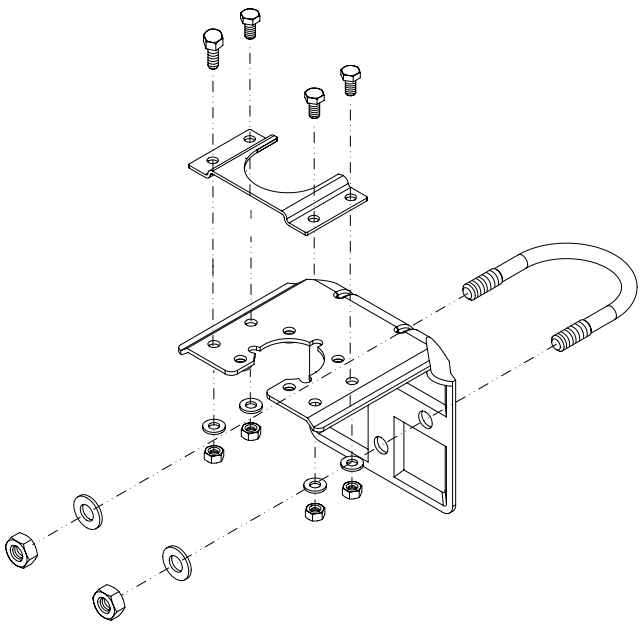

2100900-002 (B8)

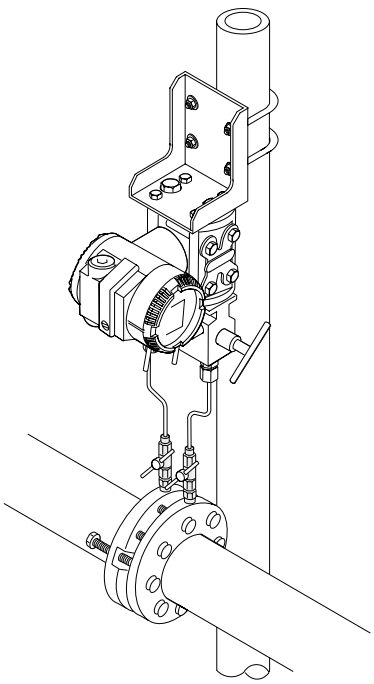

Contact us

ABB Inc.
Upstream Oil & Gas Solutions
Quotes: totalflow.inquiry@us.abb.com
Orders: totalflow.order@us.abb.com
Training: totalflow.training@us.abb.com
Support: totalflowsupport@us.abb.com
+1 800 442 3097 (opt. 2)

Oklahoma Office
7051 Industrial Boulevard
Bartlesville, OK 74006
Ph: +1 918 338 4888
+1 800 442 3097 (US only)

California Office
4300 Stine Road, Suite 405-407
Bakersfield, CA 93313
Ph: +1 661 833 2030

Kansas Office
2705 Centennial Boulevard
Liberal, KS 67901
Ph: +1 620 626 4350

Texas Offices
3700 West Sam Houston
Parkway South, Suite 600
Houston, TX 77042
Ph: +1 713 587 8000

8007 East Business 20
Odessa, TX 79765
Ph: +1 432 272 1173

150 Eagle Ford Road
Pleasanton, TX 78064
Ph: +1 830 569 8062

www.abb.com/upstream

Note
We reserve the right to make technical changes or modify the contents of this document without prior notice. With regard to purchase orders, the agreed particulars shall prevail. ABB does not accept any responsibility whatsoever for potential errors or possible lack of information in this document.

We reserve all rights in this document and in the subject matter and illustrations contained therein. Any reproduction, disclosure to third parties or utilization of its contents – in whole or in parts – is forbidden without prior written consent of ABB.

Copyright © 2017 ABB Inc.
All rights reserved

Product
webpage

DS/2102789-EN 02.2017