ABB MEASUREMENT & ANALYTICS | DATA SHEET

266HSH Modbus® Pressure/Temperature Transmitter

Engineered solutions for all applications

Measurement made easy

This intelligent 266 Modbus® transmitter provides the user with precise measurements of gauge pressure and optional process temperature (the latter by means of an externally connected Pt100 resistance temperature detector), in a single device. Information is available to any host device that can communicate using Modbus® protocol.

Product Overview

Base accuracy
— from 0.06 % of calibrated span (optional 0.04 %)

Comprehensive sensor choice
— optimize in-use total performance and stability

10–year stability
—0.15 % of URL

Flexible configuration facilities
— provided locally via local LCD keypad

New TTG (Through-The-Glass) keypad technology
— allows quick and easy local configuration without opening the cover, even in explosion proof environments

PED compliance
— Category III for PS > 21 MPa, 210 bar
— Sound Engineering Practice (SEP) for PS ≤ 21 MPa, 210 bar

— Product in compliance with Directive 2011/65/UE (RoHS II)

— In-built advanced diagnostics

Individual device Modbus® addresses can easily be configured using the optional keypad / display or using the XMV interface application in the ABB Totalflow flow computers or Remote Terminal Unit (RTU) devices.

The combination of ABB Totalflow flow computers or RTU devices and one or more ABB 266 Modbus® Transmitter makes an ideal solution.

Functional Specifications

Range and span limits

Sensor Code	Upper Range Limit (URL)	Lower Range Limit (LRL) 266HSH	Minimum Span 266HSH
E	16 kPa 160 mbar 64 inH2O	-16 kPa -160 mbar -64 inH2O	0.54 kPa 5.4mbar 2.16 inH2O
F	40 kPa 400 mbar 160 inH2O	-40 kPa -400 mbar -160 inH2O	0.4 kPa 4 mbar 1.6 inH2O
H	160 kPa 1600 mbar 642 inH2O	0.07 kPa abs 0.7 mbar abs 0.5 mmHg	1.6 kPa 16 mbar 6.4 inH2O
M	600 kPa 6 bar 87 psi	0.07 kPa abs 0.7 mbar abs 0.5 mmHg	6 kPa 0.06 bar 0.87 psi
P	2400 kPa 24 bar 348 psi	0.07 kPa abs 0.7 mbar abs 0.5 mmHg	24 kPa 0.24 bar 3.5 psi
Q	8000 kPa 80 bar 1160 psi	0.07 kPa abs 0.7 mbar abs 0.5 mmHg	80 kPa 0.8 bar 11.6 psi
S	16000 kPa 160 bar 2320 psi	0.07 kPa abs 0.7 mbar abs 0.5 mmHg	160 kPa 1.6 bar 23.2 psi
V	60000 kPa 600 bar 8700 psi	0.07 kPa abs 0.7 mbar abs 0.5 mmHg	600 kPa 6 bar 87 psi

Span limits
Maximum span = URL
IT IS RECOMMENDED TO SELECT THE TRANSMITTER SENSOR CODE PROVIDING THE TURNDOWN VALUE AS LOWEST AS POSSIBLE TO OPTIMIZE PERFORMANCE CHARACTERISTICS.

Zero suppression and elevation
Zero and span can be adjusted to any value within the range limits detailed in the table as long as:
— calibrated span ≥ minimum span

Damping
Selectable time constant : between 0 and 60 s
This is in addition to sensor response time.

Turn on time
Operation within specification in less than 10 s with minimum damping.

Insulation resistance
> 100 MΩ at 500 V DC (terminals to earth)

Communications: Modbus® protocol (RTU)
The transmitter uses 8 bit Modbus® RTU data transmission. Communications is accomplished by 2-wire half-duplex RS485 hardwire link.

Baud Rates	Data Bits	Parity Bits	Stop Bits	Total Bits
1200, 2400, 4800, 9600 (default), 19200, 38400	8	None	2	Always 11
	8	Odd	1	
	8	Even	1	

Operative Limits

Pressure limits:

Overpressure limits

Without damage to the transmitter

Sensors	Fill fluid	Overpressure limits
Sensor E to M	Silicone oil	0.07 kPa abs, 0.7 mbar abs, 0.5 mmHg and 14 MPa, 140 bar, 2030 psi
Sensor P to S	Silicone oil	0.07 kPa abs, 0.7 mbar abs, 0.5 mmHg and 21 MPa, 210 bar, 3045 psi
Sensor V	Silicone oil	0.07 kPa abs, 0.7 mbar abs, 0.5 mmHg and 90 MPa, 900 bar, 13050 psi
Sensor E to M	Inert (Galden)	0.135 kPa abs, 1.35 mbar abs, 1 mmHg and 14 MPa, 140 bar, 2030 psi
Sensor P to S	Inert (Galden)	0.135 kPa abs, 1.35mbar abs, 1 mmHg and 21 MPa, 210 bar, 2030 psi
Sensor E to M	Inert (Halocarbon)	0.4 kPa abs, 4 mbar abs, 3 mmHg and 21 MPa, 210 bar, 3045 psi
Sensor P to S	Inert (Halocarbon)	0.4 kPa abs, 4 mbar abs, 3 mmHg and 90 MPa, 900 bar, 13050 psi
Sensor V	Inert (Galden)	40 kPa abs, 400 mbar abs, 5.8 psia and 90 MPa, 900 bar, 13050 psi

Proof pressure

The transmitter can be exposed without leaking to line pressure of up to the following values:

Sensors	Proof pressure
Sensor E, F, H, M	28 MPa, 280 bar, 4060 psi
SensorP,Q, S	40.25 MPa, 402.5 bar, 5836 psi
Sensor V	171.5 MPa, 1715 bar, 24868 psi

Meet ANSI/ISA-S 82.03 hydrostatic test requirements.

Temperature limits °C (°F):

Ambient

is the operating temperature

Model 266HSH	Ambient temperature limits
Silicone oil for sensor E	-40 and 85 C (-40 and 185 F)
Inert (Galden) for sensor E to S	-20 and 85 C (-4 and 185 F)
Inert (Halocarbon) for sensor E to S	-20 and 85 C (-4 and 185 F)
Inert (Galden) for sensor V	-40 and 85 C (-40 and 185 F)

Model 266HSH	Ambient temperature limits
LCD integral display	-40 and 85 C (-40 and 185 F)

LCD display may not be clearly readable below -20 C (-4 F) or above +70 C (+158 F)

IMPORTANT

For Hazardous Atmosphere applications see the temperature range specified on the certificate/approval relevant to the aimed type of protection

Process

Model 266HSH	Process temperature limits
Silicone oil for sensor E	-40 and 121 C (-40 and 250 F)
Inert (Galden) for sensor E to S	-20 and 100 C (-4 and 212 F)
Inert (Halocarbon) for sensor E to S	-20 and 100 C (-4 and 212 F)

(1) 100 C (212 F) for application below atmospheric pressure
(2) 65 C (150 F) for application below atmospheric pressure

Storage

Model 266HSH	Storage temperature limits
Storage limits	-50 and 85 C (-58 and 185 F)
LCD integral display	-40 and 85 C (-40 and 185 F)

Environmental Limits

Electromagnetic compatibility (EMC)
Comply with 2014/30/UE to standards EN 61326-1:2013.
Surge immunity level (with surge protector): 4 kV
(according to IEC 61000-4-5 EN 61000-4-5

Pressure equipment directive (PED)
Comply with 2014/68/UE to standards ANSI/ISA 61010-1:2012
— Category III Module H for PS ≥ than 20 MPa, 200 bar
— Sound Engineering Practice (SEP) for PS < 20 MPa, 200 bar

Humidity
Relative humidity; up to 100 % Condensing, icing: admissible

Vibration resistance
Accelerations up to 2 g at frequency up to 1000 Hz (according to IEC 60068-2-6)

Shock resistance
Acceleration: 50 g
Duration: 11 ms
(according to IEDC 60068-2-27

Wet and dust-laden atmospheres
The transmitter is dust and sand tight and protected against immersion effects as deifned by IEC 60529 (2001) to IP 67 (IP 68 on request) or by NEMA Type 4X.
Aluminum and AISI housings as barrel version also comply to IP 66 as defined by IEC 60529 (2001).

Hazardous atmospheres

With or without integral display
NORTH AMERICA (code EN or ET)
US: XP Class I, Div 1, Groups A,B,C,D T5 (Ta=-50°C to +85°C) and CA: Class I, Div 1, Groups B,C,D T5 (Ta=-50°C to +85°C)
US/CA: DIP Class II, III, Div 1, Groups E,F,G, T5 (Ta=-50°C to +85°C)
US/CA: NI Class I, Div 2, Groups A,B,C,D T6, T5, T4 (Ta=-50°C to +85°C)
US/CA: FLAME PROOF Class I, Zone 1 (A)Ex d IIC T4 Gb (Ta=-50°C to +85°C)
US/CA: LIMITED ENERGY Class I, Zone 2 (A)Ex nA IIC T6, T5, T4 (Ta=-50°C to +85°C)

FLAME PROOF:
ATEX Europe (code E2 or EN) approval
II 1/2 G Ex db IIC T6 Ga/Gb Ta=-50°C to +75°C and II 1/2 D Ex tb IIIC T85 °C Db Ta = -50°C to +75°C; IP67.
IECEx (code E9 or EN) approval
Ex db IIC T6 Ga/Gb Ta=-50°C to +75 °C and Ex tb IIIC T85 °C Db Ta = -50 °C to +75 °C; IP67.

LIMITED ENGERGY:
ATEX Europe (code E3 or EN) approval
II 3G Ex nA IIC T6, T5, T4 Gc and II 3D Ex tc IIIC T85°C Dc IP67
IECEx (code ER or EN) approval
Ex nA IIC T6...T4 Gc and Ex tc IIIC T85 °C Dc; IP67

IMPORTANT
REFER TO CERTIFICATES FOR AMBIENT TEMPERATURE RANCES RELATED TO THE DIFFERENT TEMPERATURE CLASSES.

Electrical data and options

Output signal

Modbus® RS 485 with 8 bit Remote Terminal Unit (RTU) data transmission.

Modbus® interface

Configuration (HART®-RS485)	Via an RS485 interface in connection with Asset Vision Basic (DAT200) a HART® communication DTM and a corresponding Device Type Manager (DTM)
Operating (Modbus® communication)	Modbus RTU – 2-wire half-duplex RS485 serial connection
Baud rate	From 1200 to 57,600 Factory setting: 9600 bps
Parity	None, even, odd Factory setting: none
Typical response time	< 100 milliseconds
Response delay time	0 to 200 milliseconds Factory setting: 50 milliseconds
Device address	1 to 247 Factory setting: 247
Register address offset	One base

Register Mapping

	ABB		Rosemount		Invensys	
	32 Bit	16 Bit	32 Bit	16 Bit	32 Bit	16 Bit
Pressure	22	403-4	7402	403-4	47402	40403-4
Temp	23	405-6	7403	405-6	47403	40405-6

LCD display

Figure 2: LCD display (example)

Power supply

Devices with Modbus communication

Terminals	PWR + / PWR
Supply voltage	10.5 to 30 V DC

The quiescent supply current is 10 mA typically.
The transmitting supply current does not exceed 25 mA.

The transmitter operates from 10.5 to 30 V DC with no load and is protexted against reverse polarity connection. Minimum operating voltage increases to 12.3 V DC with optional surge protector or to 10.8 V DC with optional conformity to NAMUR NE 21 (2004).

Integral LCD display (code L1)

- Wide screen LCD display, 128 × 64 pixel, 52.5 × 27.2 mm (2.06 × 1.07 in), dot matrix, multilingual.
- Four buttons for device configuration and management.
- Easy setup for quick commissioning.
- Customized visualizations which the user can select.
- Total value and actual value flow indication.

The display can also be used to show pressure, sensor temperature, and diagnosis notice, as well as make configuration settings.

Integral LCD display with TTG-(Through-The-Glass) operation (code L5)
As with the integral LCD display above, but featuring an innovative TTG (Through-The-Glass) button technology which can be used to activate the device's configuration and management menus without having to remove the transmitter housing cover.
The TTG (Through-The-Glass) buttons are protected against accidental activation.

Optional extras

Mounting brackets (code Bx)
For 60mm. (2in) pipes or wall mounting.

Display (code Lx)
4-position (at 90°) user orientable.

Optional plates (code Ix)
Code I2: AISI 316 ss plate with laser printed tag (up to 31 characters) and calibration details (up to 31 characters: lower and upper range values and engineering unit) fixed onto transmitter housing.
Code I1: AISI 316 ss wired-on plate with laser printed customized data (4 lines of 32 characters with 4 mm/0.16 in. height).

Surge protection (code S2)

Test Certificates (test, design, calibration, material traceability) (codes Cx and Hx)

Tag and manual language (codes Tx and Mx)

Manifold mounting (code A1)
Factory mounting and pressure test of ABB M26 manifolds.

Process connections
For sensors H to S
1/2 in. – 14 NPT male; DIN EN837-1 G 1/2 B; adapter straight (180°) entry.

For sensor V
1/2 in. – 14 NPT male; DIN EN837-1 G 1/2 B.

Electrical connections

Cable entry
Two 1/2-14 NPT for cable glands, directly on housing

Terminals
- Two terminal for power (+ and -).
- Two terminals for RS485 communication.
- Four terminals for a Pt100 resistance thermometer with four-wire technology.
- For wire cross sections of up to 2.5 mm2 (14 AWG) and connection points for testing and communication purposes.

Grounding
Internal and external ground terminals are provided for 6 mm2 (10 AWG) wire cross sections.

Mounting position
The transmitters can be installed in any position.
The electronic housing can be rotated into any position. A stop is provided to prevent overturning.

Mass (without options)
2.1 kg approx (4.6 lb); add 1.5 kg (3.3 lb) for AISI housing. Add 650 g (1.5 lb) for packing.

Packing
Carton 27 x 24 x 20 cm approx (11 x 10 x 8 in.).

Configuration

Standard configuration

Transmitters are calibrated at the factory to the customer's specified measuring range. The calibrated range and measuring point number are specified on a tag plate.

If this data has not been specified, the transmitter will be delivered with the plate left blank and the following configuration.

Parameter	Value
Device mode	Operate (Modbus)
Device address	247
Software tag (max. 8 characters)	blank
Optional LCD display	PDP in PSI
Output	Linear
Damping	0.125 s
(PS) Output scale 0%	0 (LRL)
(PS) Output scale 100%	Upper Range Limit (URL)
Damping	0.125 s
(T) Physical unit	°F
(T) Output scale 0%	-200 (LRL)
(T) Output scale 100%	+850 Upper Range Limit (URL)
Damping	10 s

Any or all of the configurable parameters listed above – including the lower and upper range values (with the same unit of measurement) – can easily be changed using a PC running the configuration software with the DTM for 266HSH Modbus.

Note
For device functionality and simulation purpose a 178 Ω resistor (206 °C [402.8 °F]) and 2 jumpers are installed in the PT100 connection

Performance specifications

Stated at reference condition to IEC 60770 ambient temperature of 20 °C (68 °F), relative humidity of 65 %, atmospheric pressure of 1013 hPa (1013 mbar), mounting position with vertical diaphragm and zero based range for transmitter with isolating diaphragms in AISI 316 L ss or Hastelloy and silicone oil fill. Unless otherwise specified, errors are quoted as % of span. Some performance referring to the Upper Range Limit are affected by the actual turndown (TD) as ratio between Upper Range Limit (URL) and calibrated span.
IT IS RECOMMENDED TO SELECT THE TRANSMITTER SENSOR CODE PROVIDING THE TURNDOWN VALUE AS LOWEST AS POSSIBLE TO OPTIMIZE PERFORMANCE CHARACTERISTICS.
Dynamic performance (according to IEC 61298–1 definition)

Sensors	Time Constant (63.2% of total step change)
Sensor M to S	≤ 70 ms
Sensor E to H	100 ms
Sensor V	150 ms
Dead time (for all sensors)	30 ms

Response time (total) = dead time + time constant

Accuracy rating

% of calibrated span, including combined effects of terminal based linearity, hysteresis and repeatability.

Sensor	For TD	
H to Q	from 1:1 to 10:1	± 0.06 %
H to Q	from 10:1 to 100:1	± (0.006 x TD) %
S, V	from 1:1 to 10:1	± 0.075 %
S, V	from 10:1 to 100:1	± (0.0075 x TD) %
E, F	from 1:1 to 10:1	± 0.075 %
E, F	from 10:1 to 30:1	± (0.0075 x TD) %

Ambient temperature

per 20K change between the limits of –40 °C to +85 °C (per 36 °F change between the limits of –40 to +185 °F):

Model	Sensor	for TD up to	
266HSH	H to Q	10:1	± (0.03% URL + 0.045 % span)
	E, F, S, and V	10:1	± (0.04% URL + 0.065 % span)

for an ambient temperature change from –10 °C to +60 °C (+14 to +140 °F):

Model	Sensor	for TD up to	
266HSH	H to Q	10:1	± (0.055% URL + 0.08% span)
	E, F, S, and V	10:1	± (0.075% URL + 0.11% span)

per 10K change between the limits of –40 °C to –10 °C or +60° to +85 °C (per 18 °F change between the limits of –40 to +14 °F or +140° to +185 °F):

Model	Sensor	for TD up to	
266HSH	H to Q	10:1	± (0.03%URL + 0.04% span)
	E, F, S, and V	10:1	± (0.04% URL + 0.055% span)

Supply voltage
Within voltage/load specified limits the total effect is less than 0.005 % of URL per volt.

Load
Within load/voltage specified limits the total effect is negligible.

Electromagnetic field
Meets all the requirements of EN 61326 for surge immunity level (of NAMUR NE 21 on request).

Common mode interference
No effect from 100Vrms @ 50Hz, or 50 V DC

Mounting position
No effect for rotation on diaphragm plane. A tilt up to 90° from vertical causes a zero shifts up to 0.5 kPa, 5 mbar or 2 inH2O, which can be corrected with zero adjustment. No span effect.

Stability
±0.15 % of URL over a ten years period for sensors E

Maximum total performance
For temperature change of 28 °C (50 °F) for model 266HSH with accuracy option code D2 (± 0.04 %)

Sensor	Span	Maximum total performance
M	550 kPa, 5,5 bar, 80 psi	≤ ± 0.120% of calibrated span
P	2000 kPa, 20 bar, 290 psi	
Q	6900 kPa, 69 bar, 1000 psi	

$E_{Mperf} = \sqrt{(E_{\Delta Tz} + E_{\Delta Ts})^2 + E_{lin}^2}$

E_{Mperf} = Maximum total performance
$E_{\Delta Tz}$ = Effect of the ambient temperature on zero
$E_{\Delta Ts}$ = Effect of the ambient temperature on span
E_{lin} = Accuracy rating (for terminal-based linearity 0.04 %)

Total performance
similar to DIN 16086
Temperature change in the range from -10 to 60 °C (14 to 140 °F)

$E_{perf} = \sqrt{(E_{\Delta Tz} + E_{\Delta Ts})^2 + E_{lin}^2}$

E_{perf} = Total Performance
$E_{\Delta Tz}$ = Effect of the ambient temperature on zero
$E_{\Delta Ts}$ = Effect of the ambient temperature on span
E_{lin} = Accuracy rating (for terminal-based linearity 0.04 % or 0.075% as per model/sensor accuracy)

Maximum total performance and Total performance includes the measuring errors of
— non-linearity including hysteresis and non-reproducibility,
— thermal change of the ambient temperature as regards the zero signal and the calibrated span,

Physical specification

(Refer to ordering information sheets for variant availability related to specific model or versions code)

Materials

Process isolating diaphragms (*)
AISI 316 L ss; AISI 316 L ss gold plated;
Hastelloy® C-276; Monel 400®; Tantalum; (sensors E to S). AISI 316 L ss; Hastelloy® C-276

Process connection (*)
AISI 316 L ss; Hastelloy® C-276; Monel 400® (sensors F to S). AISI 316 L ss; Hastelloy® C-276

Sensor fill fluid
Silicone oil; Inert fill (Halocarbon® 4.2 or Galden®).

Mounting bracket (**)
Zinc plated carbon steel with chrome passivation; AISI 316 L ss.

Sensor housing
AISI 316 L ss.

Electronic housing and covers
Aluminium alloy (copper content ≤ 0.3 %) with baked epoxy finish (colour RAL9002); AISI 316 L ss.

Covers O-ring
Buna N.

Plates
Transmitter nameplate: AISI 316 ss screwed to the electronics housing.
Certification plate and optional tag/calibration plate : self- adhesive attached to the electronics housing or AISI 316 ss fastened to the electronics housing with rivets or screws. Optional wired-on customer data plate: AISI 316 ss.
Laser printing on metal or thermal printing on self-adhesive. For AISI 316 L ss housing it is mandatory to select option I2 or I3 for plates in AISI 316 ss.

Calibration
Standard: at maximum span, zero based range, ambient temperature and pressure;

(*) Wetted parts of the transmitter.
(**) U-bolt material: high-strength alloy steel or AISI 316 L ss; bolts/nuts material: high-strength alloy steel or AISI 316 ss.

Mounting dimensions

(not for construction unless certified) – dimensions in mm. (in.) Transmitter with barrel housing - 1/2 in. NPT female connection for sensor E to S

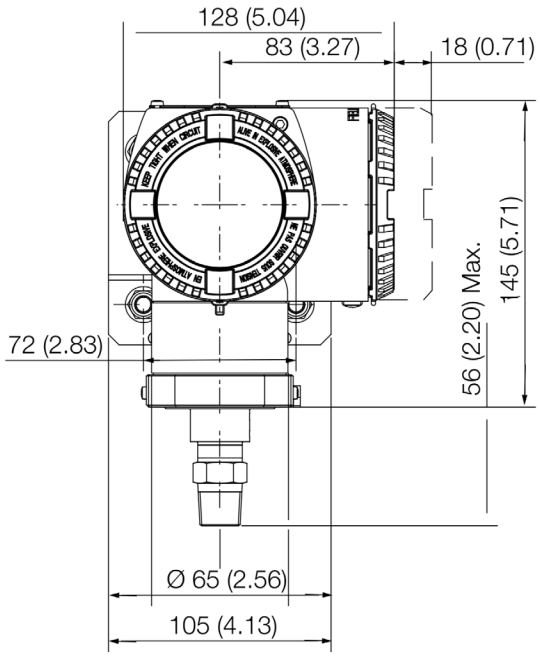

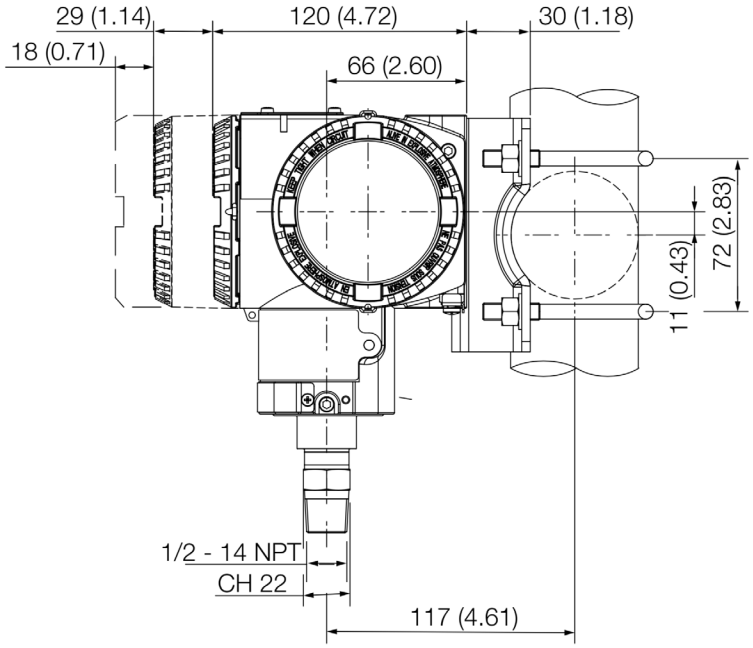

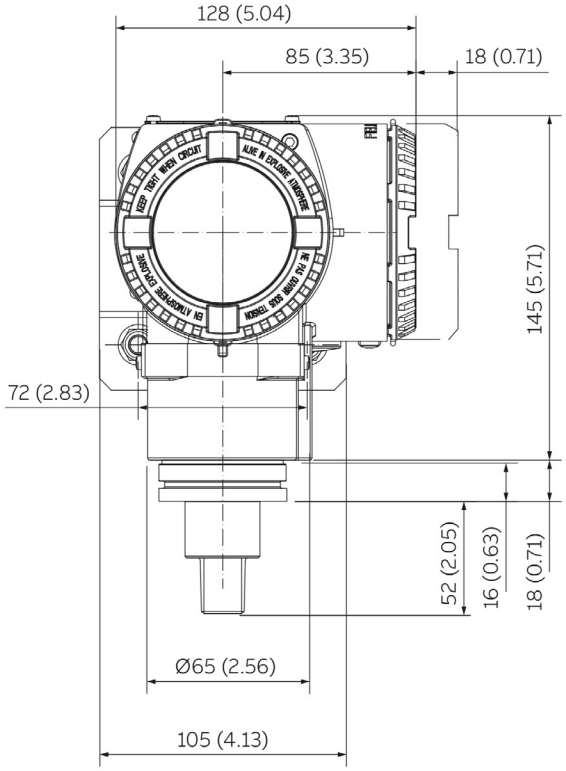

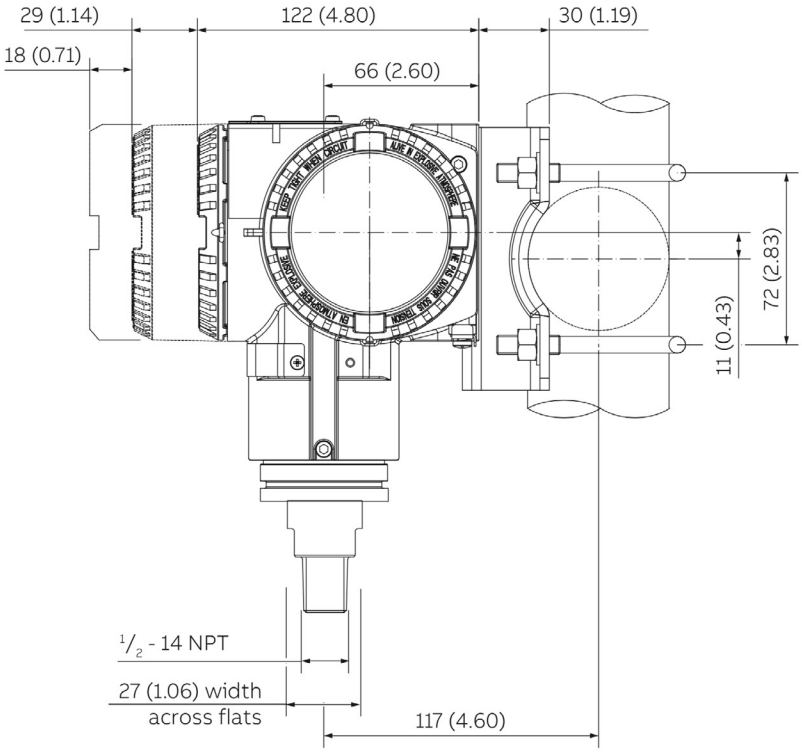

Electrical connections

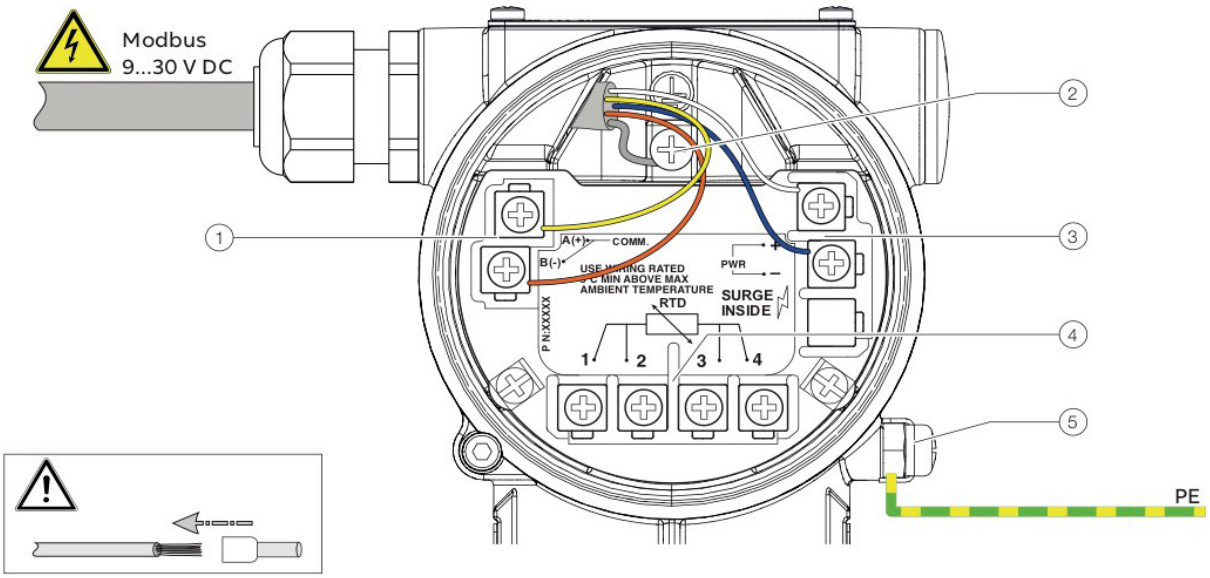

1. Terminals for Modbus interface
2. Terminal for PE ? Cable Shield
3. Terminals for power supply
4. Terminals for Pt100 resistance thermometer
5. Ground terminal

Figure 8: Connection on the device (example)

PE **Potential equalization**

Ordering information

BASIC ORDERING INFORMATION model 266HSH Gauge Pressure Transmitter
Select one character or set of characters from each category and specify complete catalog number.
Refer to additional ordering information and specify one or more codes for each transmitter if additional options are required.

Base model - 1st to 6th characters			266HSH	XX	XX	XX	XX	XX
Gauge pressure transmitter - BASE ACCURACY 0.06%								
SENSOR - Span limits 7th character						continued see next page		
0.54 and 16kPa	5.4 and 160 mbar	2.16 and 64 inH2O		E				
0.4 and 40kPa	4 and 400 mbar	1.6 and 160 inH2O		F				
1.6 and 160 kPa	16 and 1600 mbar	6.4 and 642 in H2O		H				
6 and 600 kPa	0.06 and 6 bar	0.87 and 87 psi		M				
24 and 2400 kPa	0.24 and 24 bar	3.5 and 348 psi		P				
80 and 8000 kPa	0.8 and 80 bar	11.6 and 1160 psi		Q				
160 and 16000 kPa	1.6 and 160 bar	23.2 and 2320 psi		S				
600 and 60000 kPa	6 and 600 bar	87 and 8700 psi		V				
Diaphragm material / Fill fluid (wetted parts)	8th character							
AISI 316 L ss	Silicone oil		(Note 12)	NACE	S			
Hastelloy C-276	Silicone oil		(Notes 11, 12)	NACE	K			
Monel 400	Silicone oil		(Notes 11, 12)	NACE	M			
AISI 316 L ss gold plated	Silicone oil		(Notes 11, 12)	NACE	8			
Tantalum	Silicone oil		(Notes 11, 12)	NACE	T			
AISI 316 L ss	Inert fluid - Galden		(Notes 1, 2)	NACE	A			
Hastelloy C-276	Inert fluid - Galden		(Notes 1, 2, 11, 12)	NACE	F			
Monel 400	Inert fluid - Galden		(Notes 1, 2, 11, 12)	NACE	C			
AISI 316 L ss gold plated	Inert fluid - Galden		(Notes 1, 2, 11, 12)	NACE	9			
Tantalum	Inert fluid - Galden		(Notes 1, 2, 11, 12)	NACE	D			
AISI 316 L ss	Inert fluid - Halocarbon		(Notes 1, 2, 12)	NACE	L			
Hastelloy C-276	Inert fluid - Halocarbon		(Notes 1, 2, 11, 12)	NACE	P			
Monel 400	Inert fluid - Halocarbon		(Notes 1, 2, 11, 12)	NACE	4			
AISI 316 L ss gold plated	Inert fluid - Halocarbon		(Notes 1, 2, 11, 12)	NACE	I			
Tantalum	Inert fluid - Halocarbon		(Notes 1, 2, 11, 12)	NACE	5			

BASIC ORDERING INFORMATION model 266HSH Gauge Pressure Transmitter

266HSH XX XX

Process connection (wetted parts) - 9th character

AISI 316 L ss	1/2 in. – 14 NPT female	(Notes 4, 12)	NACE	B
AISI 316 L ss	1/2 in. – 14 NPT male	(Notes 4, 12)	NACE	T
AISI 316 L ss	Adapter straight (180°) entry (not available with bracket)	(Notes 4, 12, 22)	NACE	A
AISI 316 L ss	Adapter angle (90°) entry	(Notes 4, 12, 22)	NACE	N
Hastelloy® C-276	1/2 in. – 14 NPT female	(Notes 5, 12, 22)	NACE	E
Hastelloy® C-276	1/2 in. – 14 NPT male	(Notes 5, 12, 22)	NACE	K
Hastelloy® C-276	Adapter straight (180°) entry (not available with bracket)	(Notes 5, 12, 22)	NACE	F
Hastelloy® C-276	Adapter angle (90°) entry	(Notes 5, 12, 22)	NACE	C
Monel 400®	1/2 in. – 14 NPT female	(Notes 6, 12, 22)	NACE	1
Monel 400®	1/2 in. – 14 NPT male	(Notes 6, 12, 22)	NACE	2

Housing material and electrical connection - 10th character

Aluminium alloy (barrel version)	1/2 in. – 14 NPT	A
AISI 316 L ss (barrel version) (I2 or I3 required)	1/2 in. – 14 NPT	S

Output/Additional options - 11th character

Modbus RS 485 / No additional options	N
Modbus RS 485 / Options requested (to be ordered by Additional ordering code)	6

ADDITIONAL ORDERING INFORMATION for model 266HSH

Add one or more 2-digit code(s) after the basic ordering information to select all required options

				XX	XX	XX	XX XX XX
Accuracy							
0.04 % accuracy for applicable ranges	(Notes 17, 21)			D2			
Drain/vent valve material (wetted parts)							
AISI 316 L ss	(Notes 7, 12)	NACE			VA		
Hastelloy® C-276	(Notes 8, 12)	NACE			VB		
Monel 400®	(Notes 9, 12)	NACE			VC		
Hazardous area certifications							
ATEX Explosion Proof Ex d	(Note 10)					E2	
ATEX Intrinsic Safety Ex nAnC IIc & Extc IIIc						E3	
Combined ATEX, IECEx, FM Approvals (USA) and FM Approvals (Canada)	(Note 10)					EN	
IECEx Explosion Proof Ex d	(Note 10)					E9	
IECEx Intrinsic Safety Ex nAnC IIc & Extc IIIc						ER	

ADDITIONAL ORDERING INFORMATION for model 266HSH

Other hazardous area certifications (ONLY AS ALTERNATIVE TO BASIC CERTIFICATION CODE Ex)

Integral LCD			
Digital LCD integral display with integrated keypad		L1	
Digital LCD integral display with TTG (Through-The-Glass) activated keypad		L5	
Mounting bracket (shape and material)			
For pipe/wall mounting - Carbon steel	(Not suitable for AISI housing)		B6
For pipe/wall mounting - AISI 316 L ss			B7
Surge			
Surge/Transient Protector			S2

ADDITIONAL ORDERING INFORMATION FOR MODEL 266HSH

		XX	XX	XX	XX	XX
DNV GL approval	(Notes 2, 12, 14)	YA				
Conformity to NAMUR NE 021 (2004) (NOT APPLICABLE WITH SURGE PROTECTOR CODE "S2")	(Notes 2, 12, 14, 19, 21)	YE				
NSF/ANSI 61 Drinking Water Certified		YN				
Material traceability						
Inspection certificate EN 10204–3.1 of process wetted parts (not for gaskets)	(Note 22)		H3			
Test report EN 10204–2.2 of pressure bearing and process wetted parts (not for gaskets)	(Note 22)		H4			
Configuration - Temp Limit						
Modbus Pressure				NP		
Modbus pressure + temperature				NT		
Electrical connection plug						
One certified stainless steel plug (supplied loose with thread according to housing entries)					Z1	
Accessory						
Manifold mounting and pressure test (NOT AVAILABLE WITH OXYGEN SERVICE CLEANING - PREPARATION PROCEDURE CODE "P1" or WITH DIN EN837-1 G 1/2 B PROCESS CONNECTION CODE "P", "D", "3")	(Note 22)					A1

Note 1: Suitable for oxygen service
Note 2: Not applicable
Note 3: Not available with Sensor code E to S
Note 4: Not available with diaphragm code M, T, C, D, 4, 5
Note 5: Not available with diaphragm code S, A, L, M, C, 4, 8, 9, I
Note 6: Not available with diaphragm code S, K, T, A, F, D, L, P, 5, E, G, 8, 9, I
Note 7: Not available with Process connection code E, K, D, F, C, 1, 2, 3
Note 8: Not available with Process connection code B, T, A, P, N, 1, 2, 3
Note 9: Not available with Process connection code E, K, D, F, C, B, T, A, P, N
Note 10: Not available with Housing code J
Note 11: Not available with Sensor code E and F
Note 12: Not applicable
Note 13: Not available with Sensor code E, S
Note 14: Not applicable
Note 15: Not available with Process connection code P, A, N, D, F, C, 3
Note 16: Not available with Housing code A, S, J
Note 17: Not applicable
Note 18: Not applicable
Note 19: Not applicable
Note 20: Not available with Hazardous area certification code WM, WN, WP
Note 21: Not available with Hazardous area certification code EN, E4, E6, EA, EY, EZ, ES, W1, W2, WC, W3, W4, WD, W5, W6, W7, W8, WF, WG, WH, WM, WN, WP
Note 22: Not available NSF/ANSI 61 approval code YN

IMPORTANT REMARK FOR ALL MODELS

THE SELECTION OF SUITABLE WETTED PARTS AND FILLING FLUID FOR COMPATIBILITY WITH THE PROCESS MEDIA IS A CUSTOMER'S RESPONSIBILITY, IF NOT OTHERWISE NOTIFIED BEFORE MANUFACTURING.

NACE COMPLIANCE INFORMATION

(1) The materials of constructions comply with metallurgical recommendations of NACE MR0175/ISO 15156 for sour oil field production environments. As specific environmental limits may apply to certain materials, please consult latest standard for further details. AISI 316/316 L, Hastelloy C-276, Monel 400 also conform to NACE MR0103 for sour refining environments.

(2) NACE MR-01-75 addresses bolting requirements in two classes:

- Exposed bolts: bolts directly exposed to the sour environment or buried, incapsulated or anyway not exposed to atmosphere
- Non exposed bolts: the bolting must not be directly exposed to sour environments and must be directly exposed to the atmosphere at all times.

® Hastelloy is a registered trademark of Haynes International
® Monel and Inconel are registered trademarks of Special Metals Corporation
® Galden is a registered trademark of Solvay Group
® Halocarbon is a registered trademark of Halocarbon Products Co.
® Modbus® is a Schneider Electric trademark

Contact Us

ABB Inc.
Upstream Oil & Gas Solutions
Quotes: totalflow.inquiry@us.abb.com
Orders: totalflow.order@us.abb.com
Training: totalflow.training@us.abb.com
Support: totalflowsupport@us.abb.com
+1 800 442 3097(opt. 2)

Oklahoma Office
7051 Industrial Boulevard
Bartlesville, OK 74006
Ph: +1 918 338 4888
+1 800 442 3097(US only)

Kansas Office
2705 Centennial Boulevard
Liberal, KS 67901
Ph: +1 620 626 4350

Texas Offices
3700 West Sam Houston Parkway
South, Suite 600
Houston, TX 77042
Ph: +1 713 587 8000

8007 East Business 20
Odessa, TX 79765
Ph: +1 432 272 1173

150 Eagle Ford Road
Pleasanton, TX 78064
Ph: +1830569 8062

NOTE:
We reserve the right to make technical changes or modify the contents of this document without prior notice. With regard to purchase orders, the agreed particulars shall prevail. ABB does not accept any responsibility whatsoever for potential errors or possible lack of information in this document.

We reserve all rights in this document and in the subject matter and illustrations contained therein. Any reproduction, disclosure to third parties or utilization of its contents – in whole or in parts – is forbidden without prior written consent of ABB.

Copyright© 2018 ABB
All rights reserved