ABB MEASUREMENT & ANALYTICS | DATA SHEET

266JST Modbus® multivariable

2600T series pressure transmitters

Overview

Base accuracy
0.04% of calibrated DP span (266JST)
0.05% of calibrated SP span (266JST)
Dynamic compensation of pressure and temperature changes

266JST high-performance transmitter for measuring differential pressure, absolute pressure, and process temperature in a single device

Proven sensor technology together with state-of-the-art digital technology
Large range down ratio of up to 100:1

2-year stability
0.15% of FCS (Factory Calibrated Span)

Flexible configuration options
Local configuration via keys on LCD indicator

New TTG (through-the-glass) key technology
Enables quick and easy local configuration without the need to open the cover – even in potentially explosive environments

This intelligent 266 Modbus® transmitter provides the user with precise measurements of differential pressure, absolute pressure, and process temperature (the latter by means of an externally connected Pt100 resistance temperature detector), in a single device. Information is available to any host device that can communicate using Modbus® protocol.

Individual device Modbus® addresses can easily be configured using the optional keypad / display or using the XMV interface application in the ABB Totalflow flow computers or Remote Terminal Unit (RTU) devices. This application creates a “Plug and Play” interface to the multivariable sensor and indicates any active alarms that may be present in easily understood text.

The combination of ABB Totalflow flow computers or RTU devices and one or more ABB 266 Modbus® multivariables makes an ideal solution when multi-tube measurement is required and / or when the transmitters must be located in a hazardous location.

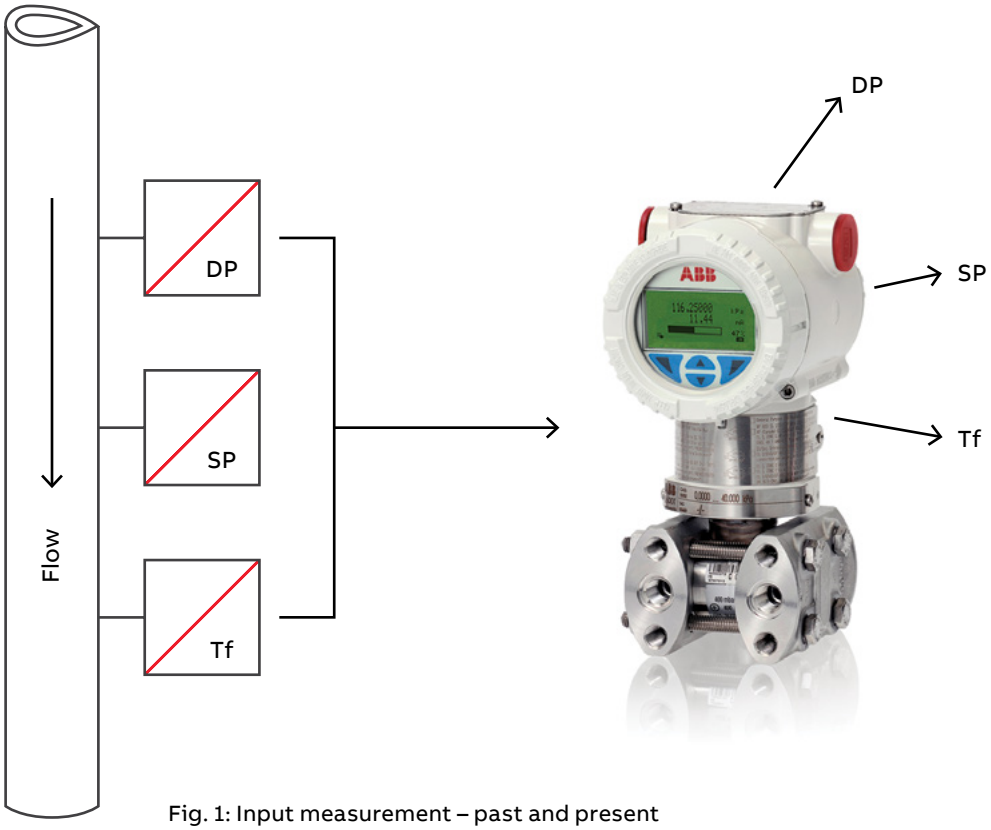

Fig. 1: Input measurement – past and present

Operating limits

Pressure limits

Overpressure limits

The transmitter models 266JST can operate without damage within the following overpressure limits:

DP Sensors	Filling fluid	One side overpressure limits
1,2	Silicone oil	0.5kPa abs., 5 mbar abs., 0.07 psia *or* 3.45 MPa, 34.5 bar, 500 psi *or* 10.4 MPa, 103.5 bar, 1500 psi *or* 22 MPa, 220 bar, 3191 psi – depending on code variant selected
5, 6, 7	Silicone oil	17.5kPa abs., 175 mbar abs., 2.5 psia *or* 3.45 MPa, 34.5 bar, 500 psi *or* 10 MPa, 100 bar, 1450 psi *or* 22 MPa, 220 bar, 3191 psi – depending on code variant selected
1,2	Fluorocarbon (Galden)	17.5 kPa abs., 175 mbar abs., 2.5 psia and 2 MPa, 20 bar, 290 psi *or* 10 MPa, 100 bar, 1450 psi *or* 22 MPa, 220 bar, 3191 psi – depending on code variant selected
5, 6, 7	Fluorocarbon (Galden)	17.5 kPa abs., 175 mbar abs., 2.5 psia and 0.6 MPa, 6 bar, 87 psi *or* 2 MPa, 20 bar, 290 psi – depending on code variant selected

Static pressure limits

The transmitter models 266JST can operate within the specifications with the following limits:

DP Sensors	Filling fluid	Static pressure limits
1,2	Silicone oil	3.5kPa abs., 35 mbar abs., 0.5 psia *or* 3.45 MPa, 34.5 bar, 500 psi *or* 10.4 MPa, 103.5 bar, 1500 psi *or* 22 MPa, 220 bar, 3191 psi – depending on code variant selected
1,2	Fluorocarbon (Galden)	17.5kPa abs., 175 mbar abs., 2.5 psia *or* 3.45 MPa, 34.5 bar, 500 psi *or* 10 MPa, 100 bar, 1450 psi *or* 22 MPa, 220 bar, 3191 psi – depending on code variant selected

Test pressure

The transmitters can withstand a pressure test with the following line pressure without leaking:

Model	Test pressure
266JST	1.5 x nominal pressure (static pressure limit) applied to both sides simultaneously[1]

[1]Meets hydrostatic test requirements of ANSI / ISA-S 82.03.

Functional specification

Communications: Modbus® protocol (RTU)

The transmitter uses 8 bit Modbus® RTU data transmission. Communications is accomplished by 2-wire half-duplex RS485 hardwire link.

Baud rates	Data bits	Parity bits	Stop bits	Total bits
1200, 2400, 4800, 9600 (default), 19200, 38400	8	None	2	Always 11
	8	Odd	1	
	8	Even	1	

Measuring range limits and span limits

Differential pressure sensor

DP sensor code	Factory calibrated span (FCS)	Lower range limit (lrl)	Minimum measuring span
1	62.3 kPa 623 mbar 250 inH2O	0 kPa 0 mbar 0 inH2O	0.623 kPa 6.23 mbar 2.5 inH2O
2	199.3 kPa 1993 mbar 800 inH2O	0 kPa 0 mbar 0 nH2O	1.993 kPa 19.93 mbar 8.0 inH2O

Absolute pressure sensor

SP sensor code	Factory calibrated span (FCS)	Lower range limit (lrl)	Minimum measuring span
5	3450 kPa 34.5 bar 500 psi	~7 psia, 0.483 bar, 48.3 kPa	138 kPa 1.38 bar 20.0 psi
6	10350 kPa 103.5 bar 1500 psi	~7 psia, 0.483 bar, 48.3 kPa	414 kPa 4.14 bar 60.0 psi
7	22000 kPa 220 bar 3000 psi	~7 psia, 0.483 bar, 48.3 kPa	880.0 kPa 8.8 bar 120.0 psi

Span limits

Maximum measuring span = FCS (Factory Calibrated Span)

- Minimum DP span = .01 x FCS
- Minimum SP span = .025 x FCS

Zero position suppression and elevation

The zero position and span can be set to any value within the measuring range limits listed in the table if:

- set span ≥ lowest span

Temperature input

Process temperature measurement range -80 °F to 1500 °F (-62 °C to 816 °C) with resistance temperature detector (Pt100) in 4-wire circuit.

Insulation resistance

> 100 MΩ at 500 V DC (between terminals and ground)

Damping

Configurable time constant between 0 and 60 s.
This is in addition to the sensor response time.
See Dynamic Response on page 12.**Warm-up time**
Ready for operation as per specifications in less than 10 s with minimum damping.

IMPORTANT (NOTE)

To optimize performance characteristics, it is recommended that you select the transmitter sensor code with the lowest turn down ratio.

Temperature limits °F (°C)

Environment

All models	Ambient temperature limits
Silicone oil	-60 °F to 185 °F (-51 °C and 85 °C)
Fluorocarbon (Galden)	-60 °F to 185 °F (-51 °C and 85 °C)
Integrated digital display (LCD)[1]	-60 °F and 185 °F (-51 °C and 85 °C)
Viton gasket	-4 °F and 185 °F (-20 °C and 85 °C)
PTFE gasket	-4 °F and 185 °F (-20 °C and 85 °C)

[1]Below -4 °F (-20 °C) and above 158 °F (70 °C), it may no longer be possible to read the digital display (LCD) clearly.

IMPORTANT (NOTE)
For applications in potentially explosive environments, the temperature specified on the certificate / approval applies, dependent upon the degree of protection sought.

Process

All models	Ambient temperature limits
Silicone oil	-40 °F and 250 °F (-40 °C and 121 °C)[1]
Fluorocarbon (Galden)	-40 °F and 250 °F (-40 °C and 121 °C)[2]
Viton gasket	-4 °F and 250 °F (-20 °C and 121 °C)
PTFE gasket	-4 °F and 185 °F (-20 °C and 85 °C)

[1]85 °C (185 °F) for applications under 10 kPa, 100 mbar abs., 1.45 psia up to 3.5 kPa abs., 35 mbar abs., 0.5 psia
[2]85 °C (185 °F) for applications below atmospheric pressure up to 17.5 kPa abs., 175 mbar abs., 2.5 psia

Storage environment / condition

Models 266JST Modbus®	
Storage temperature range	-60 °F and 185 °F (-51 °C and 85 °C)
Relative humidity during storage	Up to 75%
TTG display	-20 °F and 185 °F (-28 °C and 85 °C)

Environmental limits

Electromagnetic compatibility (EMC)

Emissions
EN55022 and FCC: Class B, (Radiated and conducted)

Immunity
Meets or exceeds EN61326-1 (Criteria A)
for ESD: 8kV / 6Kv, RFI: 10V / m, EFT: 2kV, Lightening Surge: 2kV / 1kV, Cond: 10 Vrms, Mag: 100A / m

Pressure Equipment Directive (PED)

Devices with a permissible pressure PS ≤ 200 bar (20 MPa) conform to sec. 3 para. (3) and have not been tested for conformity. The devices have been constructed and manufactured according to sound engineering practice (SEP). The CE mark on the device does not apply for the Pressure Equipment Directive. The rating plate contains the following identification codes: PED:SEP.

Humidity

Relative humidity
Up to 100%

Condensation, icing
Permissible

Vibration resistance

Acceleration up to 2 g at frequencies of up to 1,000 Hz (according to IEC 60068-2-6).

Vibration effect
Peak Error ± .3 inH2O (± 0.74 mbar) at 2G maximum) according to IEC 61298-3

Shock resistance
Acceleration: 50 g; Duration: 11 ms (according to IEC 60068-2-27).

Humid and dusty atmospheres (degree of protection)

The transmitter is dust and sand-proof and protected against immersion effects as defined by EN 60529 (1989) to IP 67, by NEMA to 4X, or by JIS C0920.

Hazardous atmospheres

With or without integrated digital display.

Ex Explosion protection aspects (Europe and International)
According to ATEX Directive (European Directive 94 / 9 / EC of March 23, 1994) and applicable European standards which assure compliance with essential safety requirements, i.e. ratings apply to transmitters with or without integrated digital display.

- EN 60079-0 (Electrical equipment for explosive atmospheres – General requirements)
- EN 60079-1 (Equipment protection by flameproof enclosures “d”)
- EN 60079-15 (Electrical equipment for explosive gas atmospheres – Part 15: Construction, test and marking of type of protection “n”)
- EN 60079-26 (Equipment with equipment protection level (EPL) – Ga)
- EN 61241-0 (Electrical equipment for combustible dust atmospheres – General requirements)
- EN 61241-1 (Protection by enclosures “tD”)

Type of protection: “Ex d” Certifications ATEX (Code E2) and IECEx (Code E9)
The transmitters are certified for the following groups, categories, and media in dangerous atmosphere, temperature classes, and types of protection.

a) Rating: ATEX II 1 / 2 G Ex d IIC T6 and ATEX II 1 / 2 D Ex tD A21 IP67 T85 °C Ta = -50 °C to +75 °C

FM Approvals Certificate: FM09ATEX0023X, The meaning of the ATEX specific code is as follows:

- II: Equipment Group for hazardous surface areas (not mines)
- 1 / 2: Category – This means the transmitter is suitable for use in the partition to category 1 (eg, sensor category 1 / transmitter category 2).
- G: Gas (dangerous media)
- D: Dust (dangerous media)

The number printed by the CE mark on the safety label identifies the notified body which has responsibility for the surveillance of the production.
The rest of the code relates to the degree of protection according to the relevant EN standards and is as described under the IECEx certificates.

a) Rating IECEx Ex d IIC T6 and IECEx Ex tD A21 IP67 T85 °C, Ta = -50 °C to +75 °C

FM Approvals Certificate: IECEx FME 09.0002X, The meaning of the rating code for IECEx (and ATEX) is as follows:

- Ex d: Flame-proof enclosure
- IIC: Explosion group gases
- T6: Temperature class of the transmitter (corresponds to 85 °C maximum) with an ambient temperature from -50 to 75 °C.
- Ex tD: Dust protected flame-proof enclosure
- A21: Dust intended zone of installation
- T85 °C: Maximum surface temperature of the transmitter housing at an ambient temperature Ta from -50 °C to +75 °C for dust (not for gas) with a dust layer up to 50 mm thick

Type of protection: “Ex n” Certification ATEX (Code E3) and IECEx (Code ER)

a) Rating: ATEX II 3 G Ex nA IIC T4 / T5 / T6 (T4 for Ta= -50 °C to +85 °C), (T5 and T6 for Ta = -50 °C to +40 °C) IP67 and ATEX II 3 D Ex tD A22 IP67 T85 °C Ta = -50 °C to +75 °C

Electrical Data: U = 30 Vdc, I = 25mA, C = 17nF, L = 0.22mH

FM Approvals Certificate: FM09ATEX0025X, The meaning of the ATEX specific code is as follows:

- II: Equipment Group for hazardous surface areas (not mines)
- 3: Category of equipment protection.
- G: Gas (dangerous media)
- D: Dust (dangerous media)
- T4: Temperature class of the transmitter (which corresponds to 135 °C Max) with Ta= -50 °C to +85 °C
- T5: Temperature class of the transmitter (which corresponds to 100 °C Max) with Ta= -50 °C to +40 °C
- T6: Temperature class of the transmitter (which corresponds to 85 °C Max) with Ta= -50 °C to +40 °C

The number printed by the CE mark on the safety label identifies the Notified Body which has responsibility for the surveillance of the production.
The rest of the code relates to the degree of protection according to the relevant EN standards and is as described under the IECEx certificates.

b) Rating: IECEx Ex nA IIC T6, Ta = -50 °C to +85 °C and IECEx Ex tD A22 IP67 T85 °C, Ta = -50 °C to +75 °C

FM Approvals Certificate: IECEx FME09.0004X, The meaning of the rating code for IECEx (and ATEX) is as follows:

- Ex nA: Non-sparking
- IIC: Explosion group gases
- T6: Temperature class of the transmitter (corresponds to 85 °C maximum) with an ambient temperature from -50 to 85 °C.
- Ex tD: Dust protected flame-proof enclosure
- A22: Dust Intended Zone of Installation
- T85 °C: Maximum surface temperature of the transmitter housing at an ambient temperature Ta from -50 °C to +75 °C for dust (not for gas) with a dust layer up to 50 mm thick

NOTE: When installed, power must be supplied to this transmitter by a voltage limiting device which will prevent the rated voltage of 30 Vdc being exceeded.

Ex protection aspects (North America)

According to Factory Mutual standards for the assurance of fundamental safety requirements in the United States of America. Ratings apply to transmitters with or without integrated digital display.

- FM 3600: Electrical Equipment for use in Hazardous (Classified) Locations, General Requirements.
- FM 3611: Non-incendive electrical equipment for use in Class I and II, Division 2 and Class III Division 1 and 2 Hazardous (Classified) Locations.
- FM 3615: Explosion-proof Electrical Equipment.
- FM 3810: Electrical and Electronic Test, Measuring and Process Control Equipment.
- NEMA 250: Enclosure for Electrical Equipment (1000 Volts Maximum)

According to CSA standards for the assurance of fundamental safety requirements in Canada.

- CSA-C22.2 No 142-M1987: Process Control Equipment, General Requirements.
- CSA-C22.2 No 213-M1987: Non-incendive Electrical Equipment for Use in Class I, Division 2 Hazardous Locations.
- CSA-C22.2 No 30: Explosion-proof Enclosures for Use in Class I, Hazardous Locations.
- CSA-C22.2 No 25: Enclosures for Use in Class II Groups E, F, and G Hazardous Locations.
- CSA-C22.2 No 94-M91: Special Purpose Enclosures
- ANSI / ISA 12.27.01: Requirements for Process Sealing Electrical Systems

United States and Canada "Explosion-proof" Certification (Code EB)

The 266 Transmitters have FM certification for the following hazardous location protections:

- Explosion-proof (US): Class I, Division 1, Groups A, B, C, and D, T5 for Ta = -50 °C to +85 °C
- Flame-proof (US): Class I, Zone 1, AEx d, IIC, T4 for Ta = -50 °C to +85 °C
- Explosion-proof (Canada): Class I, Division 1, Groups B, C, and D, T5 for Ta = -50 °C to +85 °C
- Flame-proof (Canada): Class I, Zone 1, Ex d, IIC, T4 for Ta = -50 °C to +85 °C
- Dust Ignition-proof (US & Canada): Class II, III Division 1, Groups E, F, and G, T5 for Ta = -50 °C to +85 °C
- Environmental enclosure rating: Type 4X

United States and Canada "Non-incendive" Certification (Code EC)

The 266 Transmitters have FM certification for the following hazardous location protections.

- Non-incendive (US & Canada): Class I, Division 2, Groups A, B, C, & D, T* in accordance with Non-incendive fielding wiring requirements for hazardous (classified) locations per Control Drawing DH3173.
- Non-sparking (US & Canada): Class I, Zone 2, (A)Ex nA IIC T* in accordance with non-incendive field wiring requirements for hazardous (classified) locations per Control Drawing DH3173.

T*: Temperature class is dependent on the maximum input current and the maximum ambient temperature per this table. Refer to certificates for ratings.

T Class	Minimum ambient °C	Maximum ambient °C	Imax mA	Power W
T4	-50 °C	+85 °C	100	0.75
T4	-50 °C	+70 °C	160	1
T5	-50 °C	+40 °C	100	1.75
T6	-50 °C	+40 °C	50	0.4

Type 4X applications indoors / outdoors

For correct installation in field of 266 pressure transmitters please see the related control drawing.
"Dual Seal" per ANSI / ISA 12.27.01 as indicated.
The temperature sensor circuit (Pt100) must be connected in accordance with the requirements of the Ex certificate.

At ambient temperatures of -40 °F to 185 °F (-40 °C to 85 °C), the specifications relating to the temperature classes on the relevant certificates must be observed.

Electrical data and options

Power supply
The transmitter operates from 10.5 … 30 VDC and is protected against reversed polarity.

Ripple
Maximum 40 mV RMS

Displays (optional)

Integrated LCD display (code L1)
- Wide-screen LCD display, 128 x 64 pixels, 2.06 in x 1.07 in (52.5 mm x 27.2 mm) dot matrix
- Multi-language
- Four keys for device configuration and management
- Easy setup for quick commissioning
- Customized visualizations which the user can select

The LCD display can also be used to show static pressure, differential pressure, flowing temperature, sensor temperature, and diagnostics messages, as well as make configuration settings.

Integrated LCD display with TTG operation (code L5)
As with the integrated LCD display above, but featuring an innovative TTG (through-the-glass) keypad which can be used to activate the device's configuration and management menus without having to remove the transmitter housing cover.
The TTG keys are protected against accidental activation.

Fig. 2: Integrated LCD display with TTG operation

Surge protection

The 266 Modbus® multivariable comes standard with a surge / transient suppression scheme build into the termination block.

Up to 4 kV
- Voltage: 1.2 µs rise time / 50 µs delay time at half value

Output signal

2-wire Half Duplex, RS485 Modbus® communications. Updates are 1 per second. Differential Pressure, Static Pressure, Flowing Temperature and Diagnostics are examples of available 1 second data.
- Current: 8 µs rise time / 20 µs delay time at half value

Configuration

Transmitters are calibrated at the factory to standard ranges. Optionally, they may be calibrated to the customer's specified measuring range. Accuracy specifications may vary for custom factory calibrated ranges.

The following data will be shown on the tag plates:
- Manufacturer location
- Serial number
- Product code (model number)
- Hardware revision
- Manufacture date
- PED: SEP
- Description of device "RS485 Modbus"
- Special request if applicable
- DP upper range limit (FCS)
- DP lower range limit
- DP span limits
- SP range
- Max. working pressure
- SP span limits
- Diaphragm & fluid
- Flange material & gaskets
- Power supply: 10.5 -30 Vdc
- Ambient temp. (TS) -40 to 85 °C
- Factory calibrated range: (DP and SP)

Measuring accuracy

Measuring Reference conditions for accuracy specifications are:

- Temperature at Factory Calibration: 20 °C ± 5 °C
- Relative Humidity: 40% to 70%
- Barometric Pressure: 0.9862 Bar to 1.013 Bar Silicon Oil

Some performance referring to the FCS are affected by the actual range down as ratio between FCS and calibrated span.

It is recommended to select the transmitter sensor code providing the lowest possible range down (TD) ratio to optimize performance characteristics.

Dynamic response (according to IEC 61298-1)

266JST	Sensors	Time constant (63.2% of total step response)
DP	1,2	150 ms
SP	5, 6, 7	150 ms
Reaction time for all sensors		70 ms

Response time (total) = reaction time + time constant

Measuring error

Consisting of terminal based non-linearity, hysteresis, and non-repeatability.

266JST	Sensor	Measurement area	Measuring error
DP	1, 2	From 5% to 100% FCS	± 0.04% Value
		From 0% to 5% FCS	± 0.05% of 5% FCS
SP	5, 6, 7	Barometric < Value < 100% FCS	± 0.05% Value

Mounting position

No effect for rotation on diaphragm plane. A tilt up to 90° from vertical causes a zero shift up to 0.35 kPa, 3.5 mbar or 1.4 inH2O, which can be corrected with zero adjustment. No span effect.

Long-term stability

Sensors 1, 2 and 5, 6, 7:
± 0.15% of FCS over a period of 24 months

Ambient temperature

Ambient temperature effect per 50°F (38°C) change from calibration temperature.

266JST	Sensor	Measurement area	Measuring error
DP	1, 2	From 10 to 100% FCS	± 0.05% reading
		From 0 to 10% FCS	± 0.125% reading
SP	5, 6, 7	Barometric to 100% FCS	± 0.025% FCS

Ambient temperature effect for ±100°F (±55.6°C) change from calibration temperature within the thermal limits of -40°F (-40°C) to 185°F (85°C).
Includes the effects of Thermal Hysteresis and Thermal Repeatability.

266JST	Sensor	Measurement area	Measuring error
DP	1, 2	From 10 to 100% FCS	± (0.0025% FCS + 0.05% reading)
		From 0 to 10% FCS	± (0.005% FCS + 0.125% reading)
SP	5, 6, 7	Barometric to 100% FCS	± 0.025% FCS

Thermal Hysteresis / (Thermal Repeatability) over temperature range of -40°F (-40°C) to 185°F (85°C).

266JST	Sensor	Measuring error
DP	1, 2	Thermal Hysteresis ±(0.0075% FCS + 0.002% reading) Thermal Repeatability ±(0.002% FCS + 0.001% reading)
SP	5, 6, 7	Thermal Hysteresis ±(0.0075% FCS + 0.002% reading) Thermal Repeatability ±(0.002% FCS + 0.001% reading)

Static pressure effect (SPE) to Differential
Zero signal errors may be calibrated out at operating pressure.

Measuring range	Sensors 1, 2 (250 in H2O, 800 in H2O)
DP Zero error	Up to 1450 psi (100 bar): 0.01% of FCS
	> 1450 psi (100 bar): 0.01% of FCS per 1450 psi (100 bar)
DP Span error	Up to 1450 psi (100 bar): 0.02% of reading
	> 1450 psi (100 bar): 0.02% of reading per 1450 psi (100 bar)

Technical specification

Please refer to the order information to check the availability of different versions of the relevant model.

Materials

Process separation diaphragms[1]
Stainless steel 1.4435 (AISI 316L);
Hastelloy C276

Process flanges, adapters, screw plugs, and vent / drain valves[1]
Stainless steel 1.4404 / 1.4408 (AISI 316L)

Sensor filling fluid
Silicone oil, fluorocarbon (Galden)

Mounting bracket[2]
Aluminum

Gaskets[1]
Viton (FPM); Buna (NBR); EPDM; PTFE

Sensor housing
Stainless steel 1.4404 (AISI 316L)

Screws and nuts
Screws and nuts made from stainless steel AISI 316, class A4-70 as per UNI 7323 (ISO 3506) in compliance with NACE MR0175 Class II

Electronics housing and cover
Aluminum alloy (copper content ≤ 0.3%) with baked epoxy finish (color: RAL 9002); stainless steel AISI 316L.

O-ring cover
Buna N (Perbunan)

Plates
Stainless steel AISI 316 for transmitter name plate, certification plate, optional measuring point tag plate / settings plate attached to electronics housing, and optional tag plate with customer data. All plates laser-labeled.

Calibration

Standard
- 0 to measuring range upper limit (SP)
- Barometric to measuring range upper limit (SP)
- -40 °F (-40 °C) to 212 °F (100 °C) Process Temperature
- -40 °F (-40 °C) to 185 °F (85 °C) Ambient Temperature

Optional
To specified measuring span for DP and SP

Surge and transient protection

The transmitter is equipped standard with a transient suppressor scheme on the termination block.

[1]Transmitter parts that come into contact with fluid
[2]U-bolt material: stainless steel AISI 400; screw material: high-strength alloy steel or stainless steel AISI 316

Optional extras

Mounting bracket
For vertical and horizontal 60 mm (2 in.) pipes or wall mounting

LCD display
Can be rotated in 90° increments into 4 positions

Certificates (test, design, characteristics, material traceability)

Operating instruction language

Process connections

Flanges: ¼-18 NPT on the process axis
Adapters: ½-14 NPT on the process axis
Center distance: 54 mm (2.13 in.) between flanges;
51 mm, 54 mm, or 57 mm (2.01 in., 2.13 in., or 2.24 in.) between adapters.
Fastening screw threads: 7/16–20 UNF with 41.3 mm center distance.

Packaging

Carton with dimensions of approximately 11 x 9 x 9 in (28 x 23 x 24 cm)

Electrical connections

Two ½-14 NPT or M20 x 1.5 threaded bores for conduit or cable glands, directly on housing.

Terminals
Terminals are sized for wire cross sections of up to 2.5 mm2 (14 AWG), Two terminals for power (+) and (-), Two terminals for RS485 communications (+) and (-), Four terminals for a Pt100 resistance temperature detector (RTD) with 4-wire technology.

Grounding
Internal and external ground terminals are provided for 4 mm2 (10 AWG) wire cross sections.

Mounting position

The transmitters can be installed in any position. The electronic housing can be rotated into any position. A stop is provided to prevent overturning.

Weight (without options)

Approximately 8.4 lb (3.8 kg); add 3.3 lb (1.5 kg) for housing made from stainless steel. Add 1.5 lb (650 g) for packaging.

Mounting dimensions

(not design data) – dimensions in mm (inch)

Transmitter with barrel housing – Horizontal flanges

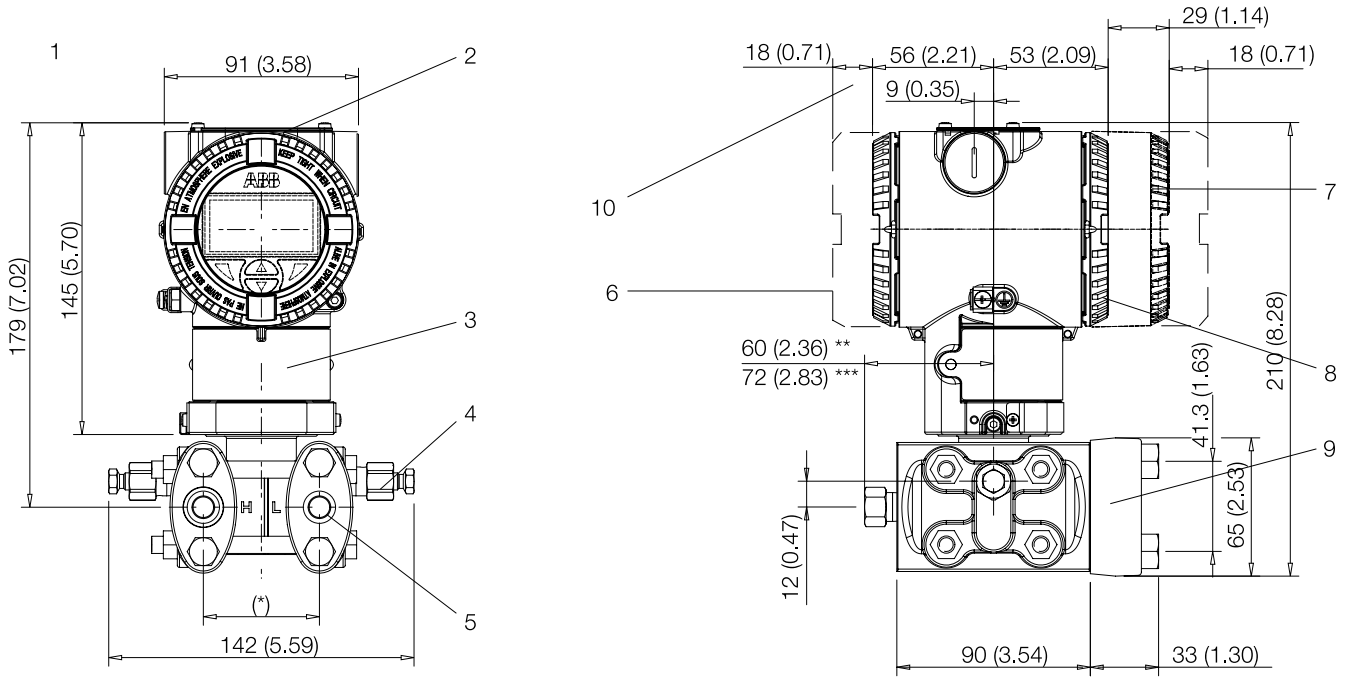

Fig. 3: Barrel housing – Horizontal flanges
1 Settings | 2 Name plate | 3 Certification plate | 4 Vent / drain valve | 5 Process connection | 6 Terminal side | 7 LCD display housing cover | 8 Electronics side | 9 Process flange adapter | 10 Space for removing the cover

* 54 (2.13) mm (in.) via ¼ – 18 NPT process flanges
51 (2.01), 54 (2.13), or 57 (2.24) mm (in) via ½ – 14 NPT adapter flanges.
Note: Process connection and gasket groove comply with IEC 61518. Thread for attaching adapter flanges or other components (e.g., manifold) to process flange: 7/16 -20 UNF.
** With screw plug
*** With vent / drain valve

Transmitter with barrel housing – Vertical flanges

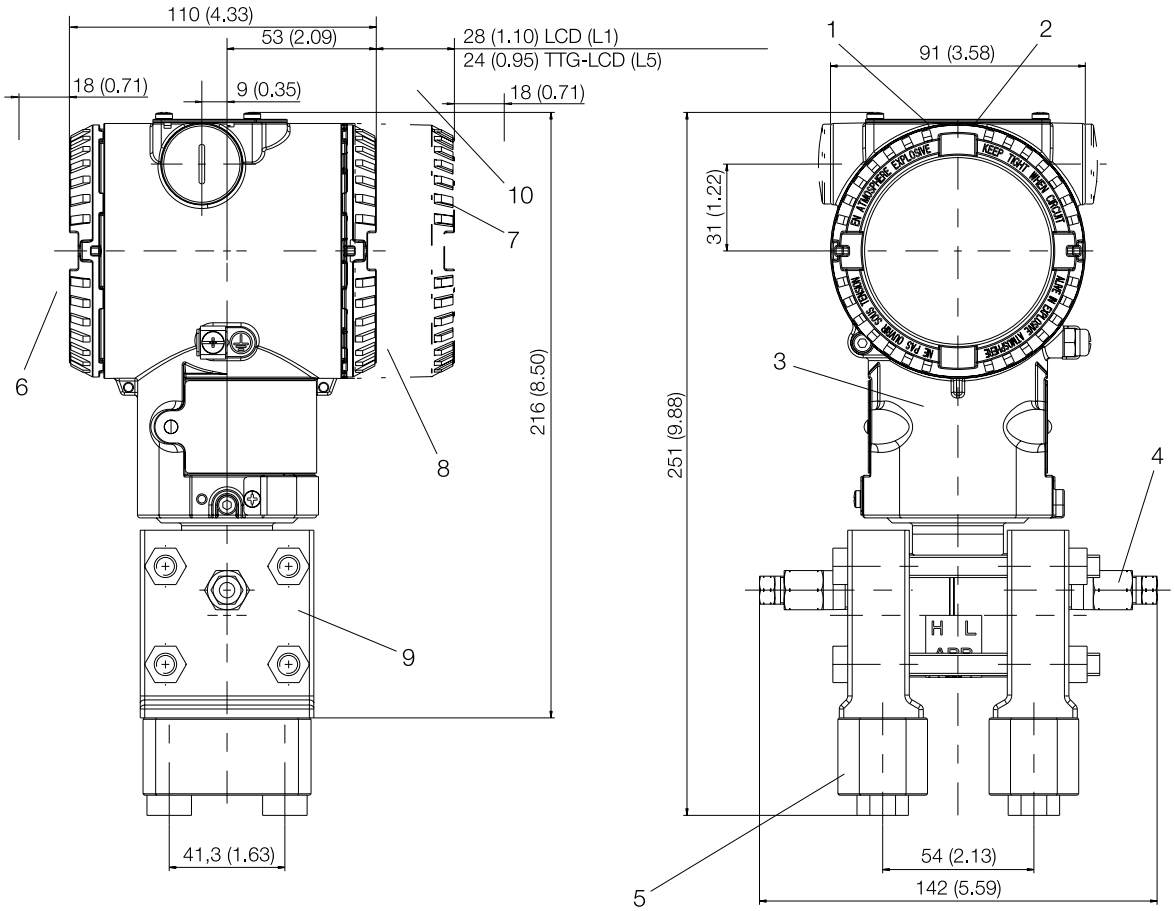

Fig. 4: Barrel housing – Vertical flanges

1 Settings | 2 Name plate | 3 Certification plate | 4 Vent / drain valve | 5 Process connection | 6 Terminal side | 7 LCD display housing cover | 8 Electronics side | 9 Process flange adapter | 10 Space for removing the cover

Transmitter with mounting bracket, for vertical or horizontal mounting on 60 mm (2 in.) pipe

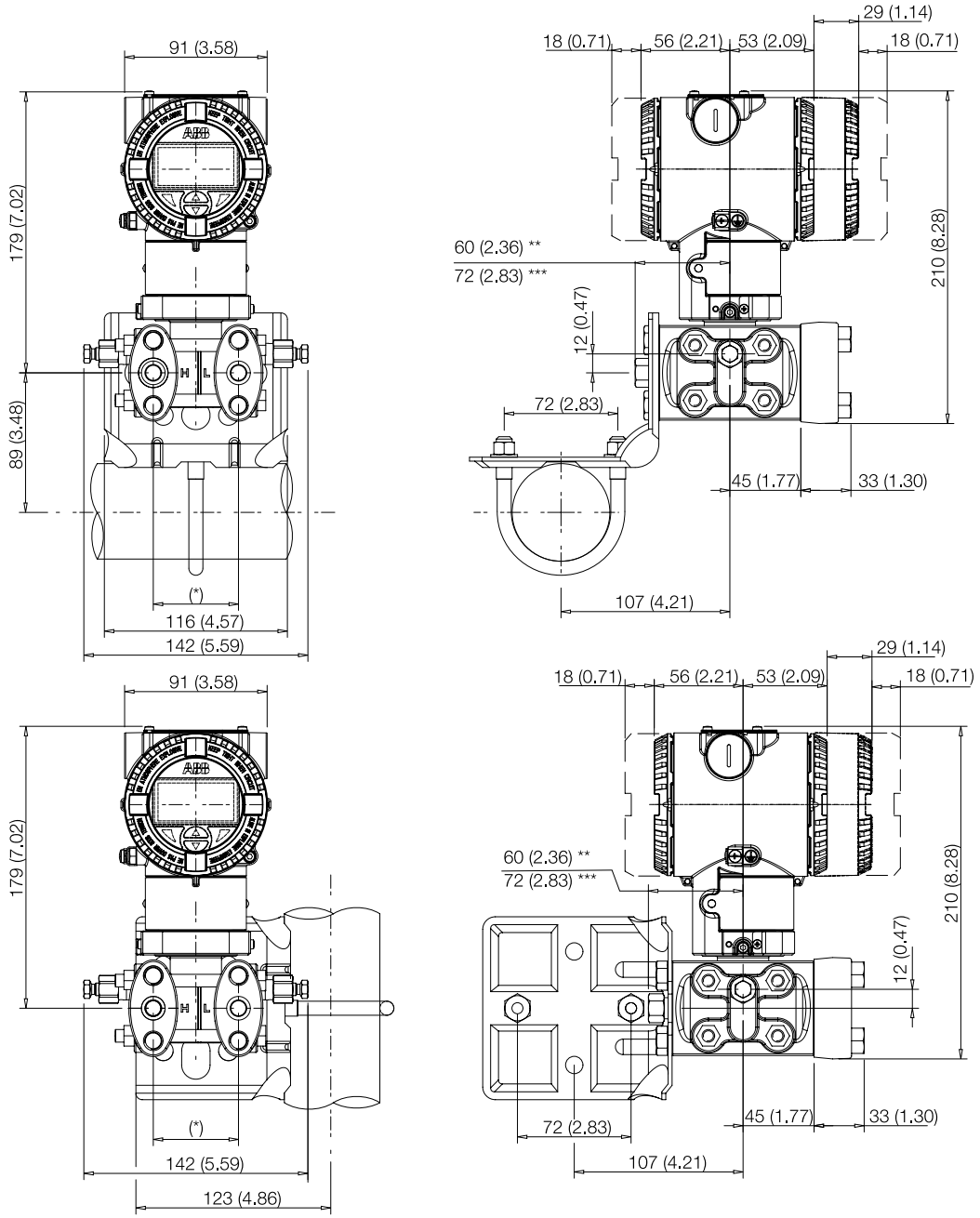

Fig. 5: Pipe mounting – Barrel housing

* 54 (2.13) mm (in.) via ¼ – 18 NPT process flanges
51 (2.01), 54 (2.13), or 57 (2.24) mm (in) via ½ – 14 NPT adapter flanges.
Note: Process connection and gasket groove comply with IEC 61518. Thread for attaching adapter flanges or other components (e.g., manifold) to process flange: 7/16 -20 UNF.

** With screw plug

*** With vent / drain valve

Transmitter with flat bracket, for vertical or horizontal mounting on 60 mm (2 in.) pipe

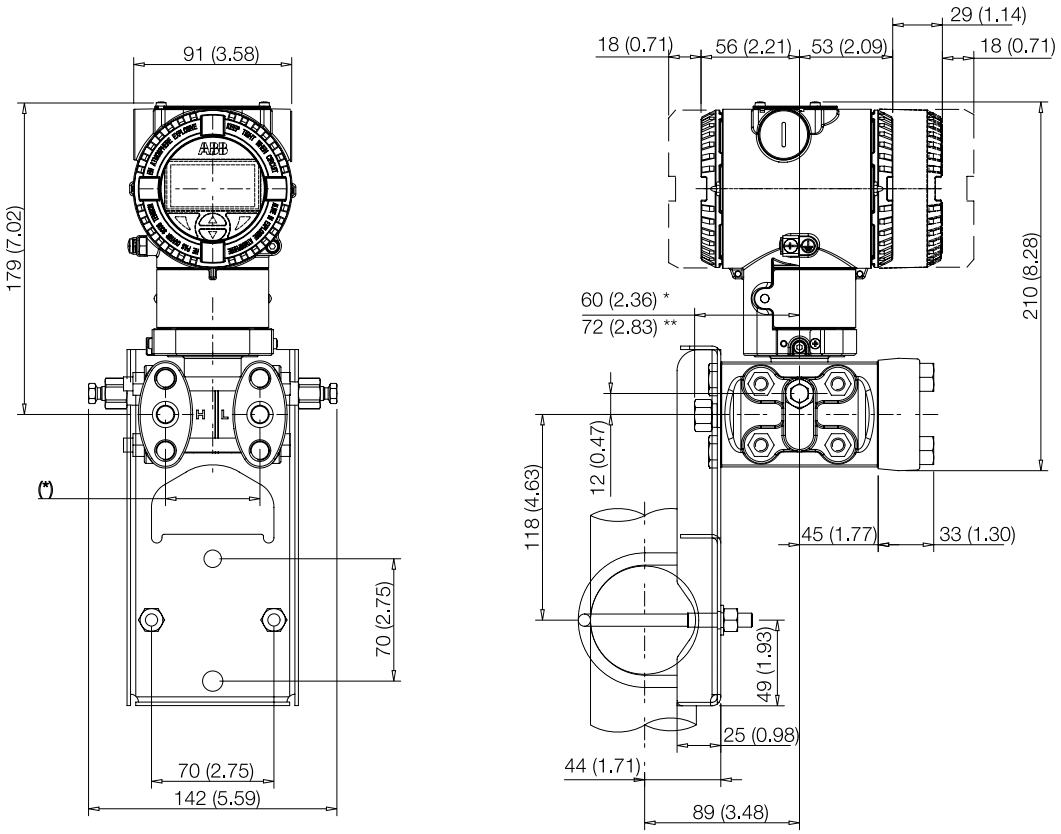

Fig. 6: Flat bracket for pipe mounting – Barrel housing

* With screw plug
** With vent / drain valve

Ordering information

Basic ordering information model 266JST multivariable transmitter, for differential pressure, absolute pressure, and temperature measurement.

Select one character or set of characters from each category and specify complete catalog number.
Refer to additional ordering information and specify one or more codes for each transmitter if additional options are required.

Base model – 1st to 6th characters

Multivariable transmitter, for differential, abosolute pressure and temperature
JST base accuracy: DP 0.04%; SP 0.05%

										266JST
				e	f	g	h	r	s	t
DP Sensor span limits – 7th character										
Kilopascals (kPa)	**Millibars (mbar)**	**Inches of water (H2O)**								
0.622722 to 62.2722	6.22722 to 622.722	2.5 to 250		1						
1.992710 to 199.271	19.9271 to 1992.71	8.0 to 800		2						
SP Maximum working pressure (with sensor span limits codes 1-2) – 8th character										
Megapascals	**Bars**	**Pounds / square inch (psi)**								
0 and 3.44738	0 and 34.4738	0 and 500			5					
0 and 10.3421	0 and 103.421	0 and 1500			6					
0 and 120.684	0 and 206.843	0 and 3000 (not available with e1)			7					
Diaphragm material and fill fluid – 9th character										
Diaphragm material	**Fill fluid**									
Hastelloy C-276	Silicone oil					K				
Process flanges, adapters material, and connections – 10th character										
Process flanges	**Adapters Material**	**Connection**								
AISI 316L SST (1.4404 / 1.4408)	¼-18 NPT female direct	Horizontal connection	NACE				A			
AISI 316L SST (1.4404 / 1.4408)	¼-18 NPT female direct	Vertical connection	NACE				Q			
Bolts and gaskets material – 11th character										
Bolts material	**Gaskets material**									
AISI 316L SST	Viton	Note 1	NACE: non-exposed					3		
AISI 316L SST	PTFE	Max. 25 MPa / 250 bar / 3625 psi	NACE: non-exposed					4		
AISI 316L SST	EPDM		NACE: non-exposed					5		
Housing material and electrical connections – 12th character										
Electronic Housing material	**Electrical connection**									
Aluminum alloy (Barrel type)	½-14 NPT								A	
Aluminum alloy (Barrel type)	M20 x 1.5								B	
AISI 316L SST (Barrel type)	½-14 NPT								S	
AISI 316L SST (Barrel type)	M20 x 1.5								T	
Output – 13th character										
Modbus® RS485	with options									5

			266JST						
			zv	ze	zl	zb	zm	zt	zi
Vent and drain valve material and position – 14th & 15th characters									
Vent and drain valve material	**Position**								
No Selection	No Selection		NO						
AISI 316L SST (1.4404)	On process axis	NACE	V1						
AISI 316L SST (1.4404)	On flanges side top	NACE	V2						
AISI 316L SST (1.4404)	On flanges side bottom	NACE	V3						
Explosion protection certification – 16th & 17th characters									
No Selection				NO					
ATEX Group II, Category 1/2 GD – Ex d		E2 and E9 use same marking		E2					
ATEX Group II, Category 3 GD – Ex nA		E3 and ER use same marking		E3					
FM (USA/Canada) XP/Ex d (Explosion-proof) or NI/Ex nA (Non-Incendive)		Class I, Div 1 or Div 2		ET					
IEC Ex II, Category 1/2 GD – Ex d		E2 and E9 Use same marking		E9					
IEC Ex II, Category 3 GD – Ex nA		E3 and ER use same marking		ER					
Integral LCD – 18th & 19th characters									
Without display					NO				
With integral LCD display					L1				
Mounting bracket shape and material – 20th & 21st characters									
Mounting bracket shape	**Material**								
No selection	No selection					NO			
For pipe mounting	AISI 316 SST (1.4401)	Not suitable for AISI housing				B2			
For pipe mounting	Aluminum					B8			
Operating instruction language – 22nd & 23rd characters									
English							M5		
Label and tag language – 24th & 25th characters									
English								NO	
Additional tag plate – 26th & 27th characters									
No selection									NO

Ordering information continued

						266JST
	zn	zp	zc	zh	zu	za
Configuration – 28th & 29th characters						
No selection	NO					
Preparation procedure – 30th & 31st characters						
No selection		NO				
Certificates – 32nd & 33rd characters						
Inspection certificate 3.1 acc. EN 10204 of calibration			C1			
Inspection certificate 3.1 acc. EN 10204 of pressure test			C5			
Declaration of compliance with the order 2.1 acc. EN 10204 for instrument design			C6			
Separate calibration record			CC			
Printed record of configured data of transmitter			CG			
Material traceability – 34th & 35th characters						
No selection				NO		
Certificate of compliance with the order 2.1 acc. EN 10204 for process wetted parts				H1		
Inspection certificate 3.1 acc. EN 10204 of pressure-bearing and process wetted parts with analysis certificates as material verification				H3		
Material certificate 2.2 acc. EN 10204 of the pressure bearing and process wetted parts				H4		
Connector – 36th & 37th characters						
No selection					NO	
AISI SST cable gland ½ NPT					UA	
AISI SST cable gland ½ MV20					UC	
Housing accessories – 38th & 39th characters						
No selection Note 2						NO

Note 1: Suitable for oxygen service
Note 2: Minor parts with factory certificate acc. to EN 10204

Standard delivery scope

Changes possible with additional ordering code.

- Adapters supplied loose
- Surge and transient terminal block is standard
- Sealing plugs for horizontal connection flanges on the process axis
- Sealing plugs not included for vertical connection flanges
- No vent / drain valves
- Hastelloy Diaphragms – Silicone Oil
- EDPM Flange Seals
- For standard applications (without explosion protection)
- No display, no mounting bracket
- English short operating instructions and English labeling
- Configuration with Bar / Mbar and °C units
- Standard Calibration Certificate
- No test, inspection, or material certificates

Important remark for all models

The selection of suitable wetted parts and filling fluid for compatibility with the process media is a customer's responsibility, if not otherwise notified before manufacturing.

NACE compliance information

1. The materials of constructions comply with metallurgical recommendations of NACE MR0175/ISO 15156 for sour oil field production environments. As specific environmental limits may apply to certain materials, please consult latest standard for further details. Materials AISI 316 / AISI 316L, Hastelloy C-276, Monel 400 also conform to NACE MR0103 for sour refining environments.
2. NACE MR0175 addresses bolting requirements in two classes:
   - Exposed bolts: bolts directly exposed to the sour environment or buried, encapsulated or anyway not exposed to atmosphere.
   - Non exposed bolts: the bolting must not be directly exposed to sour environments, and must be directly exposed to the atmosphere at all times.

266JST bolting identified by "NACE" are in compliance to the requirements of NACE MR0175 when considered "non exposed bolting."

® Hastelloy C-276 is a Cabot Corporation trademark
® Monel is an International Nickel Co. trademark
® Viton is a DuPont de Nemours trademark
® Galden is a Montefluos trademark
® Modbus® is a Schneider Electric trademark

Castel Maggiore (BO) 40013
Via Lirone 60/i

e-mail: info@eurotecsrl.com
Tel: +39 051/6321595
Website: www.eurotecsrl.com

C.F.: 04103780377
P.I.: 01596581205

ABB Inc.
Measurement & Analytics
Quotes: totalflow.inquiry@us.abb.com
Orders: totalflow.order@us.abb.com
Training: totalflow.training@us.abb.com
Support: totalflowsupport@us.abb.com
+1 800 442 3097 (opt. 2)

Main Office
7051 Industrial Boulevard
Bartlesville, OK 74006
Ph: +1 918 338 4888

www.abb.com/upstream

California Office
4300 Stine Road
Suite 405-407
Bakersfield, CA 93313
Ph: +1 661 833 2030

Kansas Office
2705 Centennial Boulevard
Liberal, KS 67901
Ph: +1 620 626 4350

Texas Office – Odessa
8007 East Business 20
Odessa, TX 79765
Ph: +1 432 272 1173

Texas Office – Houston
3700 West Sam Houston
Parkway South, Suite 600
Houston, TX 77042
Ph: +1 713 587 8000

Texas Office – Pleasanton
150 Eagle Ford Road
Pleasanton, TX 78064
Ph: +1 830 569 8062

We reserve the right to make technical changes or modify the contents of this document without prior notice. With regard to purchase orders, the agreed particulars shall prevail. ABB does not accept any responsibility whatsoever for potential errors or possible lack of information in this document.

We reserve all rights in this document and in the subject matter and illustrations contained therein. Any reproduction, disclosure to third parties or utilization of its contents – in whole or in parts – is forbidden without prior written consent of ABB.

© Copyright 2018 ABB.
All rights reserved.

DS/2101130-EN – Rev. C 11.2018