

CA32D, CA39D

PANEL DOUBLE FREQUENCY METER

CE

APPLICATION

CA32D, CA39D double pointer frequency meters are moving-coil meters with built-in measuring transducers intended for measuring voltage frequency in AC electrical networks.

TECHNICAL DATA

Table 1

Measuring range	Accuracy class	Code
45... 55 Hz	0.5	1
45... 65 Hz	0.5	2
55... 65 Hz	0.5	3
360... 440 Hz	0.5	4
380... 420 Hz	0.5	5

Input voltages

Table 2

Input voltages	Code
60 V	1
100 V	2
110 V	3
230 V	4
400 V	5
415 V	6
440 V	7
500 V	8

Rated operating conditions

- ambient temperature -10...23...55°C
- relative air humidity 25...85%

Power consumption ≤ 7VA

Protection Grade acc. to EN60529

- front protection grade: in standard IP 52
  on request **IP 65 - only CA39D**
- terminal protection (with a terminal protection cover) - IP20

Electromagnetic compatibility:

- emission acc. EN 61000-6-4 standard
- immunity acc. EN 61000-6-2 standard

Safety requirements acc. EN 61010-1+A1 standard

- installation category III
- level of polution 2

Maximal working voltage in relation to the earth 660 V AC

Housing material thermoplastic, self-extinguishing plastic (UL 94V-O)

Glass material glass (in standard)
anti-reflective glass on request

Weight

– CA32D 490 g
– CA39D 280 g

ACCESSORIES

We deliver with the meter:
- holders fixing the meter to the plate - 2 pcs. (for CA39D) or 4 pcs. (for CA32D).

EXTERNAL DIMENSIONS OF CA39D METER FOR IP65 PROTECTION GRADE

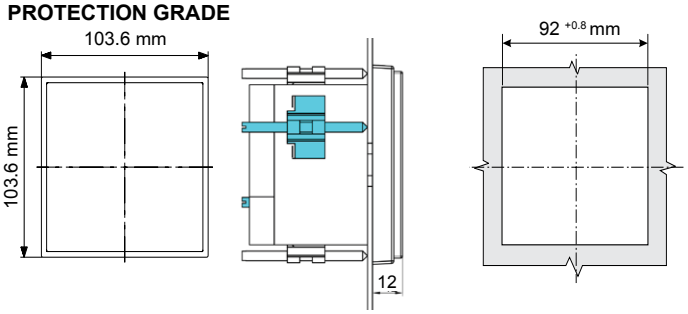

Included are two screw holders which should be fixed on arbitrary, opposite case corners

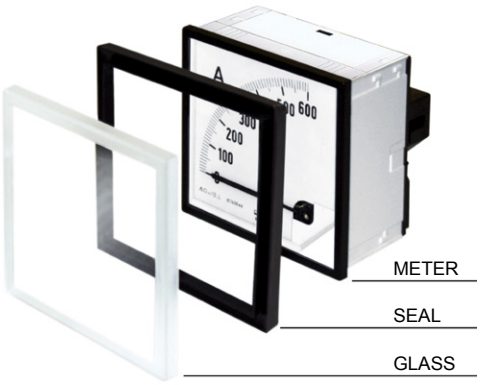

EXTERNAL DIMENSIONS OF CA39D, CA32D

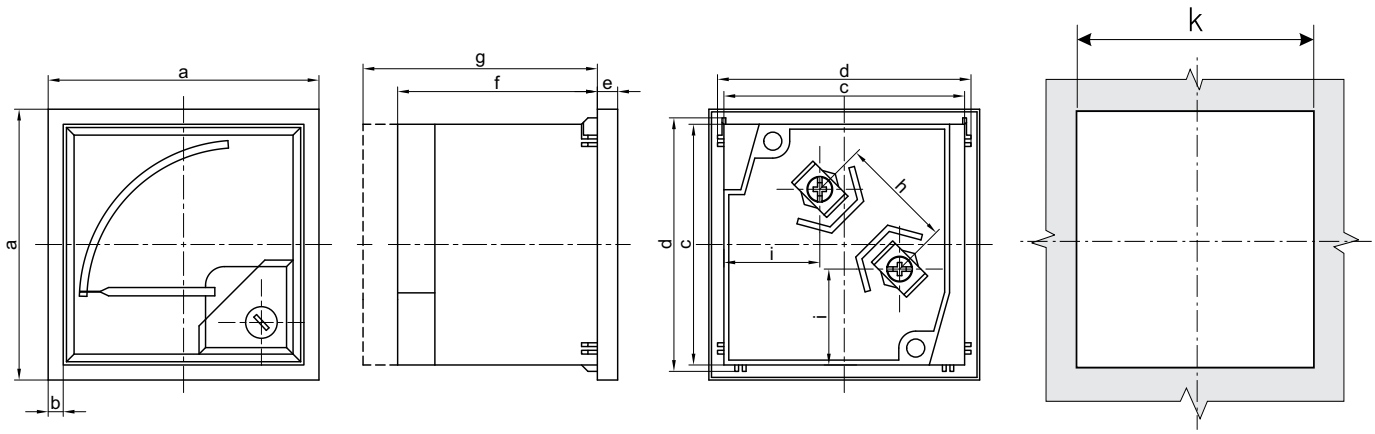

Fig. 1. External dimensions of CA36, CA37, CA39, CA32 meters.

External dimensions od CA39D, CA32D [mm] meters.

Table 3

Type	a	b	c	d	e	f	g	h	i	k*
CA39D	96	4	88	91,5	5,5	53	64	30	27,2	92+0,8
CA32D	144	5,5	136	137,5	8,5	53	64	30	37	138+1

* panel cut-out dimensions

WORKING POSITION

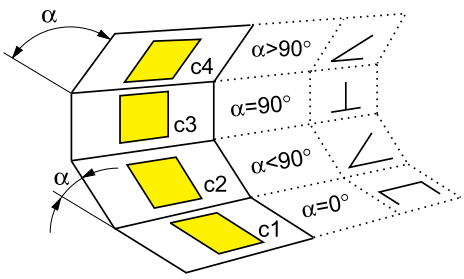

Table 4

Code	Working position
0	c3
A	c1
B	c2 α = 15°
C	c2 α = 30°
D	c2 α = 45°
E	c2 α = 60°
F	c2 α = 75°
H	c4 α = 105°
I	c4 α = 120°

WAY OF THE METER FIXATION ON THE PANEL.

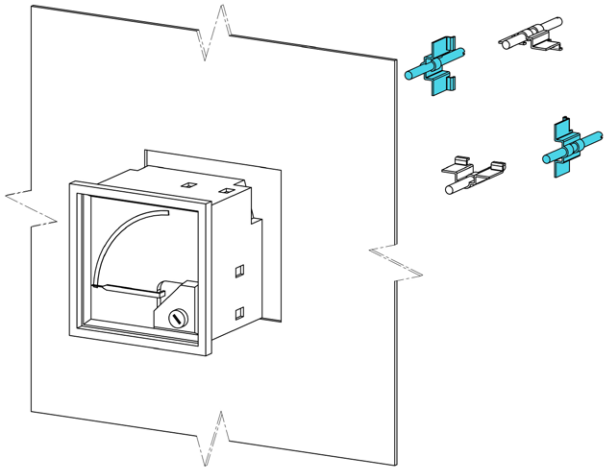

Fig. 2. Fixing of meters CA39D in the panel (version with IP52) [1]

[1] Included are two screw holders which should be fixed on arbitrary, opposite case corners

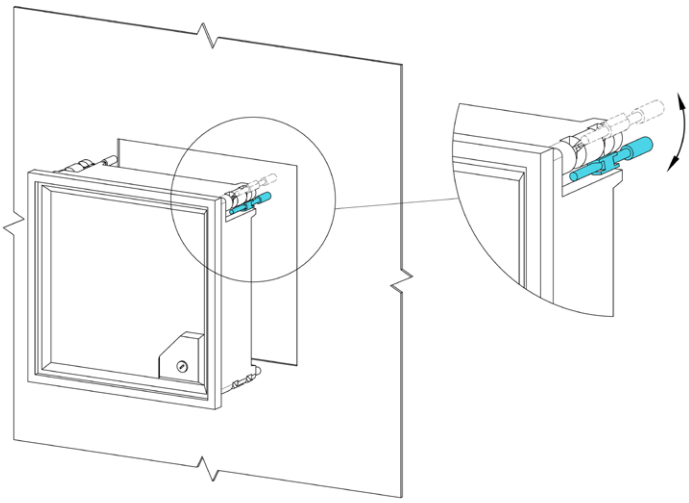

Fig. 3. Fixing of CA32D meters (version with IP52)[2]

[2]The meter is fixed to the panel by two screw holders situated on opposite corners of the case.

CONNECTIONS

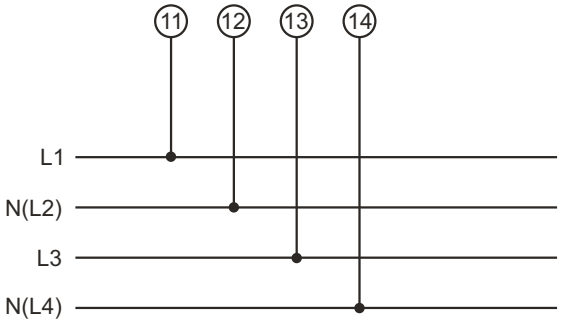

ORDERING PROCEDURE

PANEL FREQUENCY METERS CA32D, CA39D	X	X	X	X	X	XX	X
Measuring range 1:							
write in the code acc. table 1	X						
Measuring range 2:							
write in the code acc. table 1		X					
Rated voltage for range 1:							
write in the code acc. table 2			X				
Rated voltage for range 2:							
write in the code acc. table 2				X			
Working position:							
write in the code acc. table 4					X		
Version:							
standard						00	
custom-made*						XX	
Acceptance tests:							
Without additional requirements							0
With a certificate delivered by the Technical Inspection Dept.							1
Other requirements*							X

* The version number is settled by the manufacturer.

Example of order
Code: CA39D 12450000, means:
The version of a frequency meter with one pointer for frequency measurement 45...55 Hz, rated voltage: 230 V and second pointer for frequency measurement 45...65 Hz, rated voltage: 400 V, working position: c3 (90°- vertical), standard version, without additional requirements.

Via Lirone 60/i, Castel Maggiore (BO) 40013
e-mail: info@eurotecsrl.com Website: www.eurotecsrl.com
Tel: +39 051/6321595 C.F. 04103780377 P.I. 01596581205